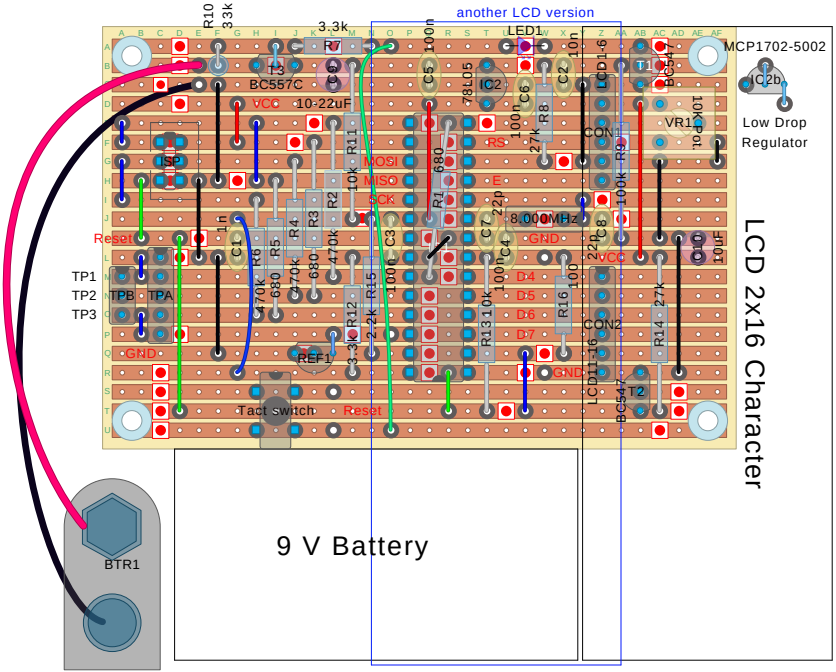
another LCD version
LCD 2x16 Character
9 V Battery
BTR1
Tact switch
Reset
ISP
TP1
TP2
TP3
TPB
TPA
GND
VCC
MOSI
MISO
SCK
RS
E
D4
D5
D6
D7
T3
BC557C
T1
BC547
T2
BC547
IC2
78L05
IC2b
MCP1702-5002
Low Drop
Regulator
VR1
LED1
LCD1-6
CON
LCD11-16
CON2
REF1
8.000MHz
R10
33k
R7
3.3k
10-22uF
C5
100n
C6
100n
C4
10n
R8
27k
R9
100k
C8
220
C10
10uF
R1
680
C7
22p
C3
100n
C1
1n
R6
470k
R5
680
R4
470k
R3
680
R2
470k
R11
10k
R12
3.3k
R15
2.2k
R13
10k
R16
100
R14
27k