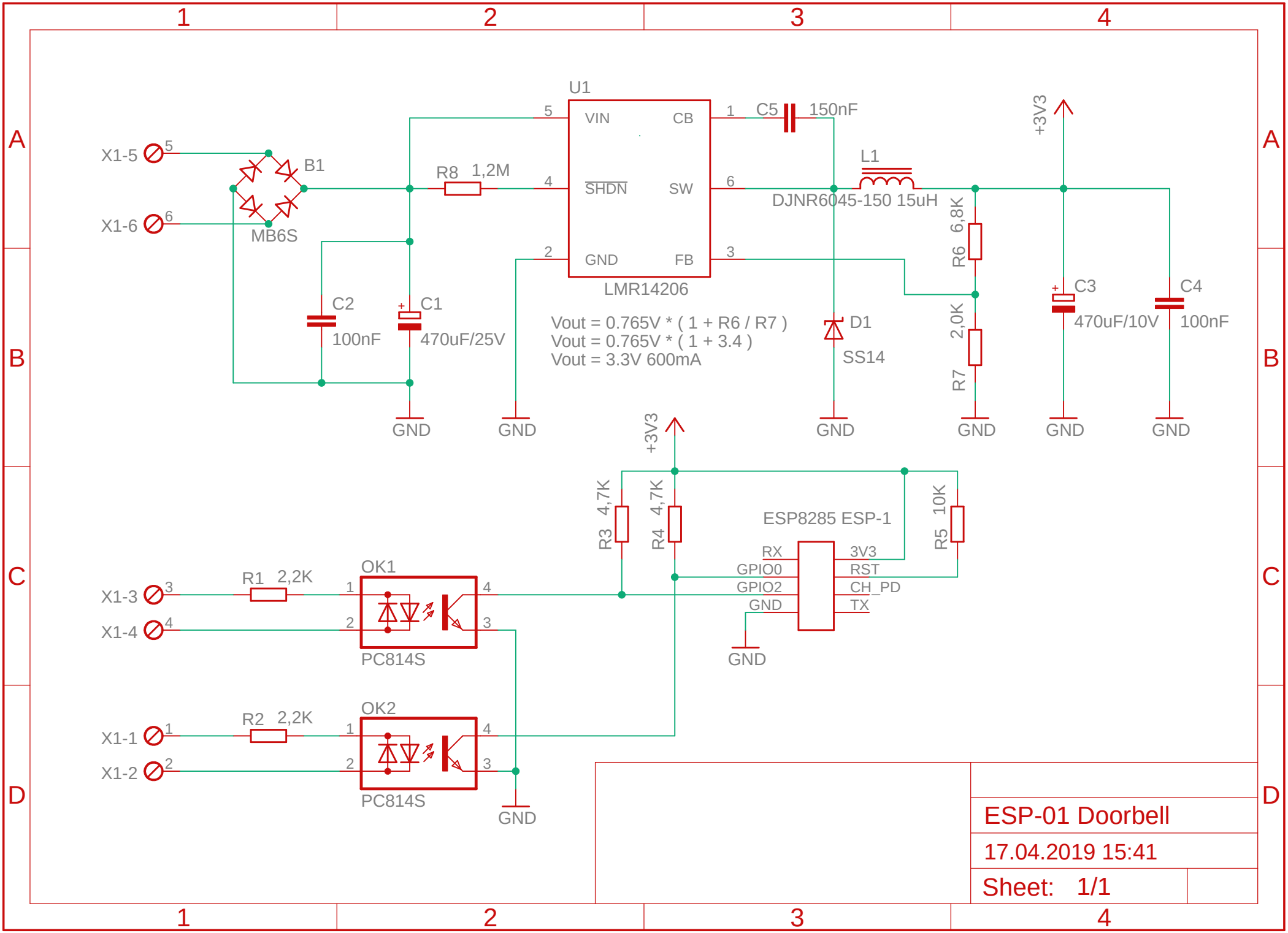
U1
VIN
CB
SHDN
SW
GND
FB
LMR14206
C5 150nF
L1
DJNR6045-150 15uH
+3V3
R8 1,2M
X1-5
X1-6
B1
MB6S
C2
100nF
C1
470uF/25V
Vout = 0.765V * (1 + R6 / R7)
Vout = 0.765V * (1 + 3.4)
Vout = 3.3V 600mA
D1
SS14
R6 6,8K
R7 2,0K
C3
470uF/10V
C4
100nF
GND
R3 4,7K
R4 4,7K
R5 10K
ESP8285 ESP-1
RX
GPIO0
GPIO2
GND
3V3
RST
CH_PD
TX
X1-3
X1-4
R1 2,2K
OK1
PC814S
X1-1
X1-2
R2 2,2K
OK2
PC814S
ESP-01 Doorbell
17.04.2019 15:41
Sheet: 1/1