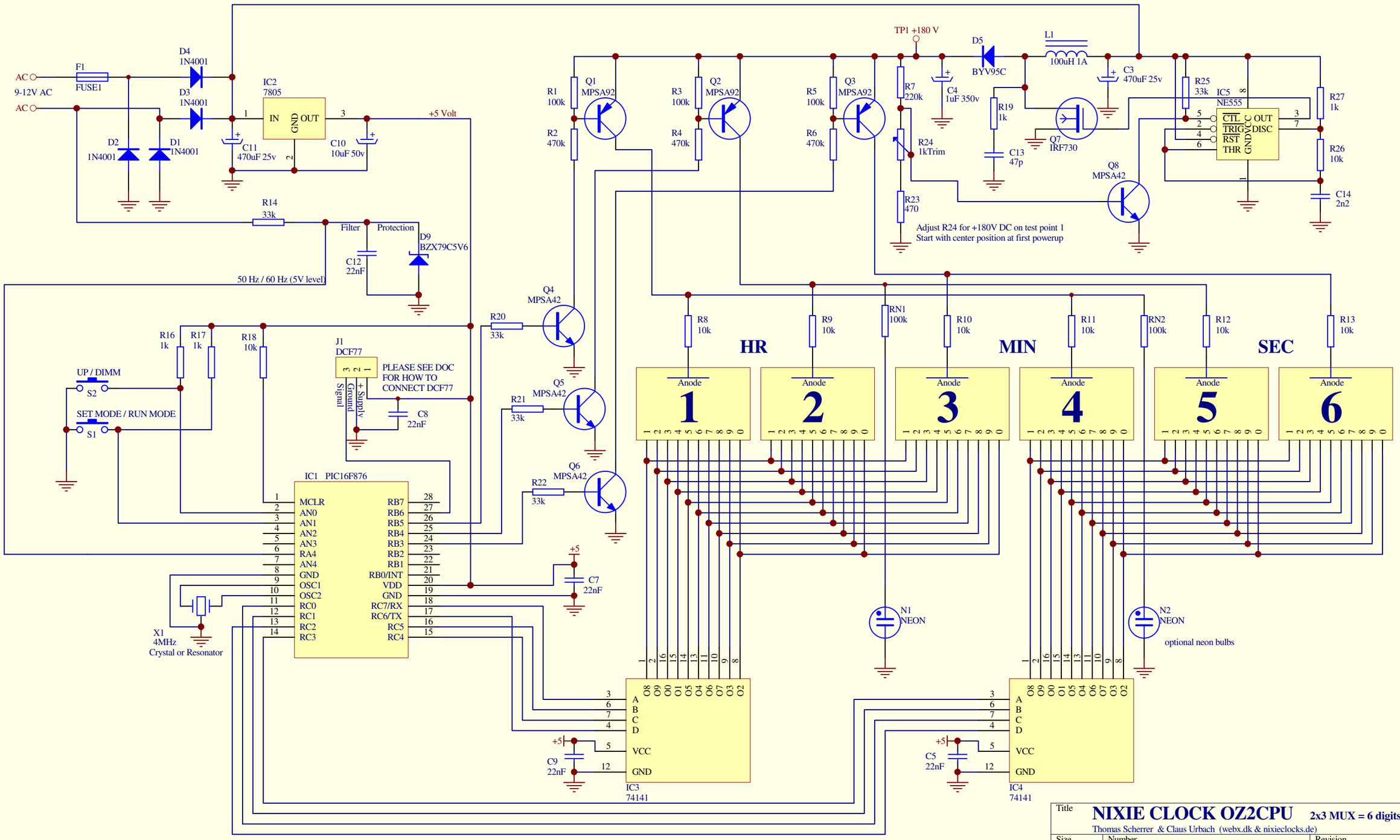

Title	**NIXIE CLOCK OZ2CPU** 2x3 MUX = 6 digits Thomas Scherrer & Claus Urbach (webx.dk & nixieclocks.de)	
Size B	Number **Schematic for PCB 1.06-IN18**	Revision **6c**
Date: 17-Feb-2010		Sheet 1 of 1
File: d:\ver106.ddb		Drawn By: OZ2CPU Thomas Scherrer