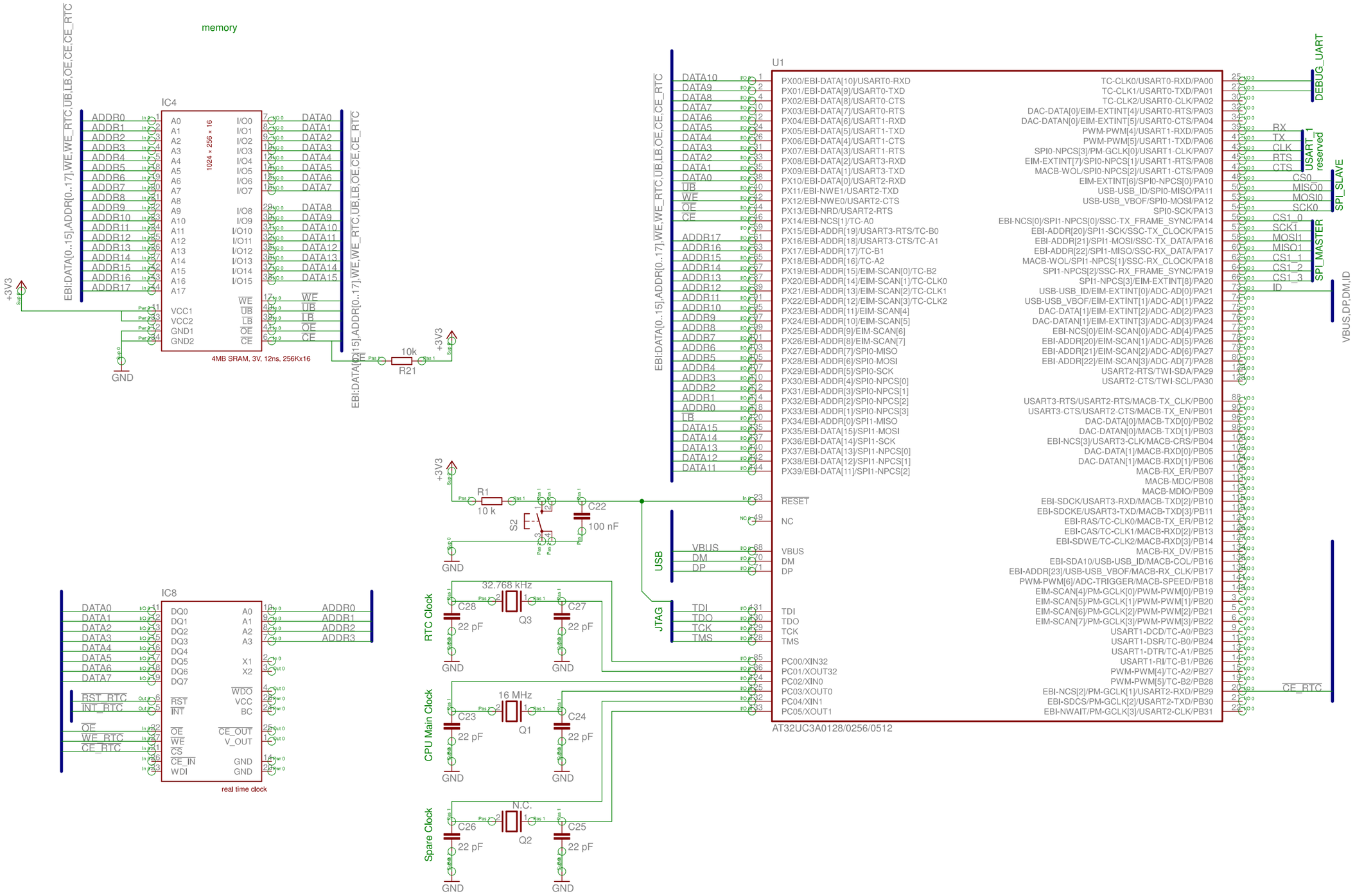
memory
IC4
1024 × 256 × 16
4MB SRAM, 3V, 12ns, 256Kx16
EBI:DATA[0..15],ADDR[0..17],WE,WE_RTC,UB,LB,OE,CE,CE_RTC
+3V3
GND
R21
10k
U1
AT32UC3A0128/0256/0512
DEBUG_UART
USART_1
reserved
SPI_SLAVE
SPI_MASTER
VBUS,DP,DM,ID
USB
JTAG
R1
10 k
C22
100 nF
S2
IC8
real time clock
RTC Clock
32.768 kHz
Q3
C28
C27
22 pF
CPU Main Clock
16 MHz
Q1
C23
C24
Spare Clock
N.C.
Q2
C26
C25