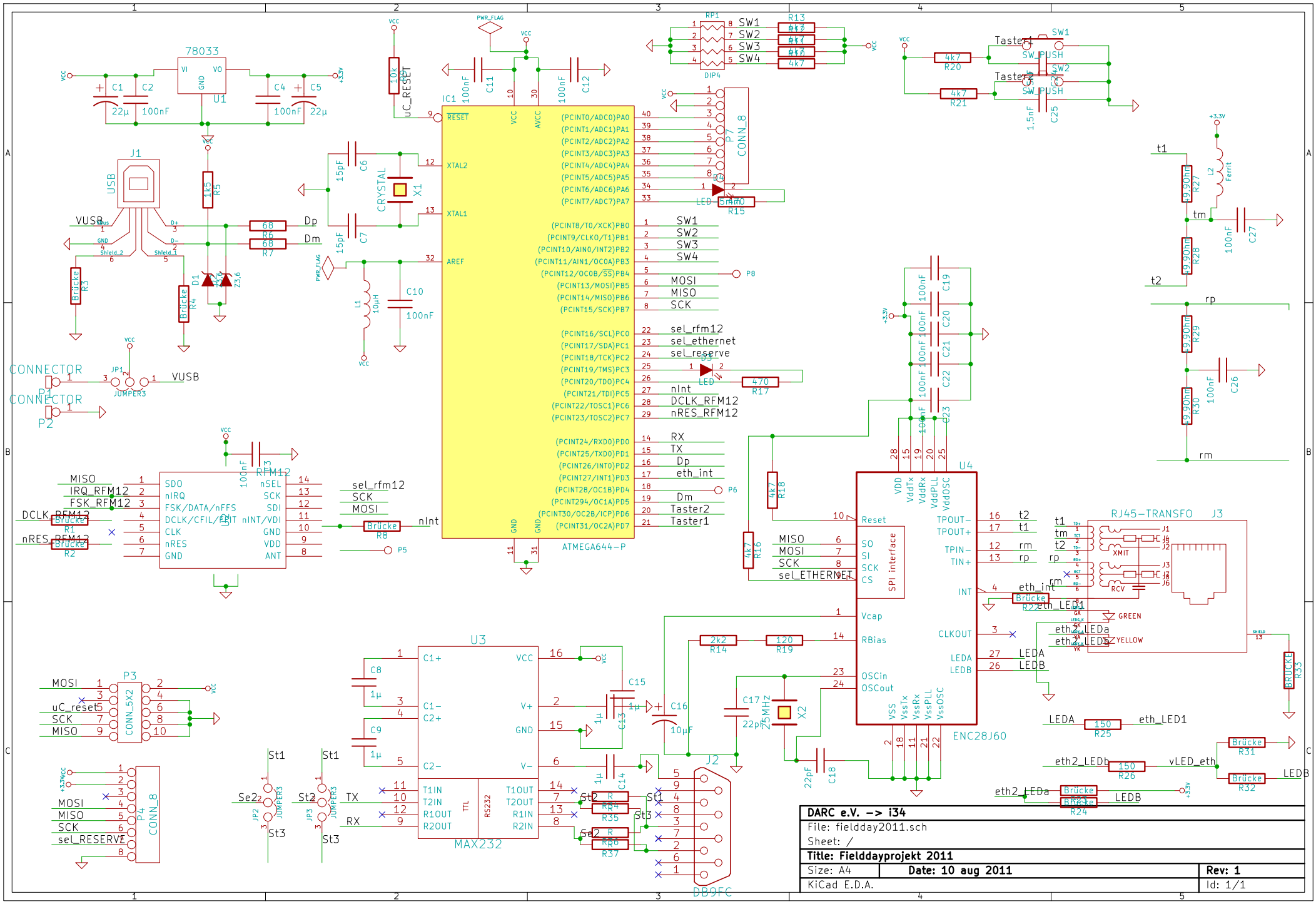

DARC e.V. --> i34		
File: fieldday2011.sch		
Sheet: /		
Title: Fielddayprojekt 2011		
Size: A4	**Date: 10 aug 2011**	**Rev: 1**
KiCad E.D.A.		Id: 1/1