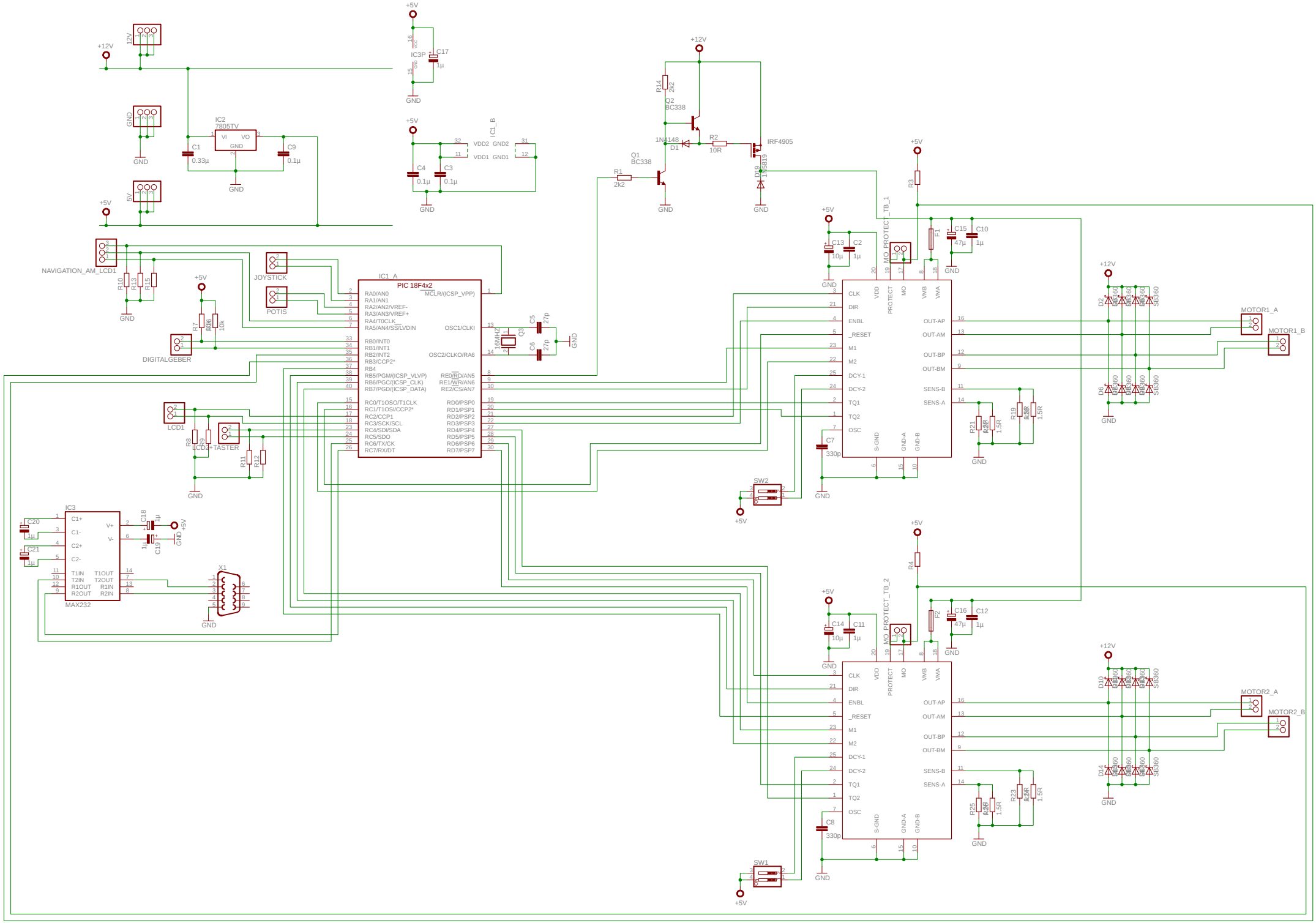
IC1_A
PIC 18F4x2
IC1_B
IC2
7805TV
IC3
MAX232
IC3P
MO_PROTECT_TB_1
MO_PROTECT_TB_2
PROTECT
MOTOR1_A
MOTOR1_B
MOTOR2_A
MOTOR2_B
NAVIGATION_AM_LCD1
JOYSTICK
POTIS
DIGITALGEBER
LCD1
LCD2+TASTER
IRF4905
BC338
1N4148
1N5819
16MHZ
SW1
SW2
X1
+5V
+12V
GND