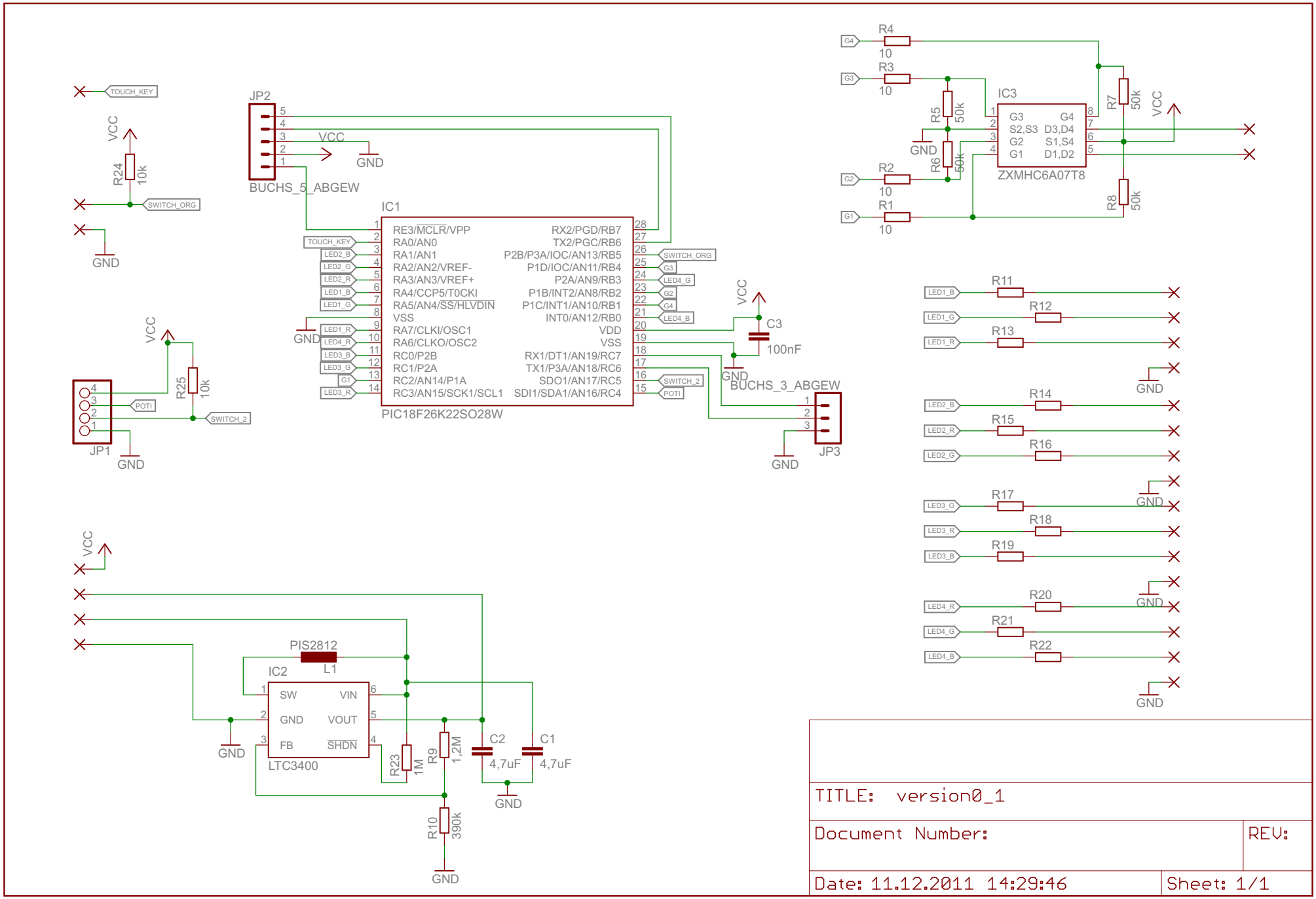

TITLE: version0_1

Document Number:

REV:

Date: 11.12.2011 14:29:46

Sheet: 1/1