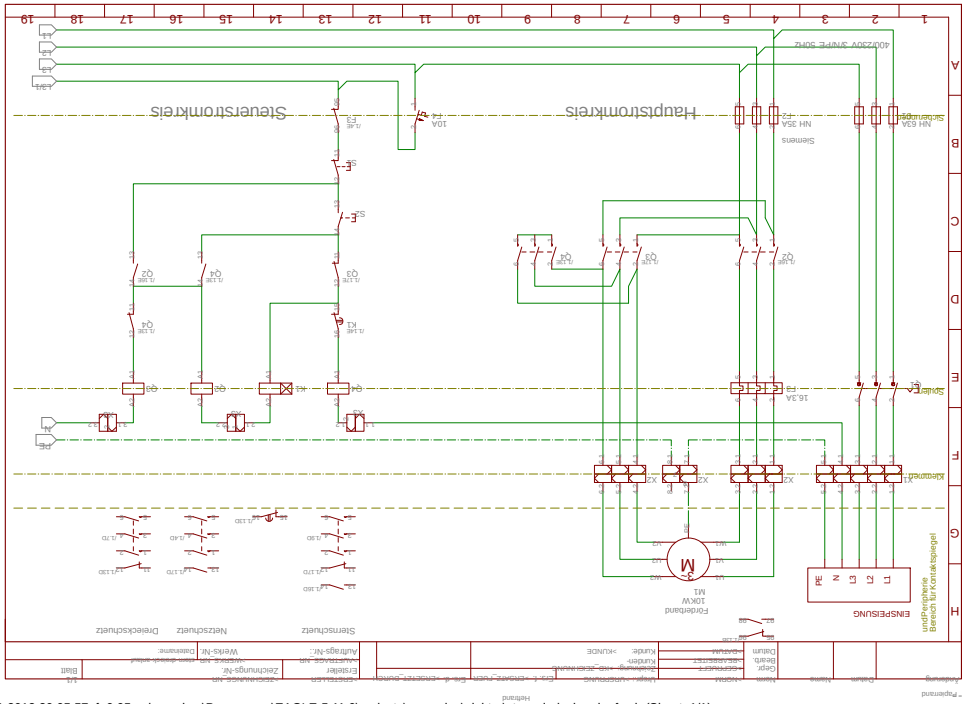

06.01.2012 20:05:57 f=0.95 mirrored c:\Programme\EAGLE-5.11.0\projects\examples\elektro\stern-dreieck-anlauf.sch (Sheet: 1/1)

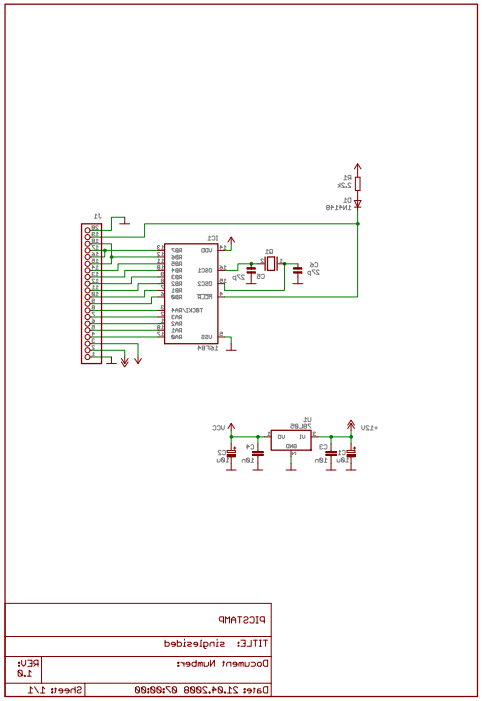

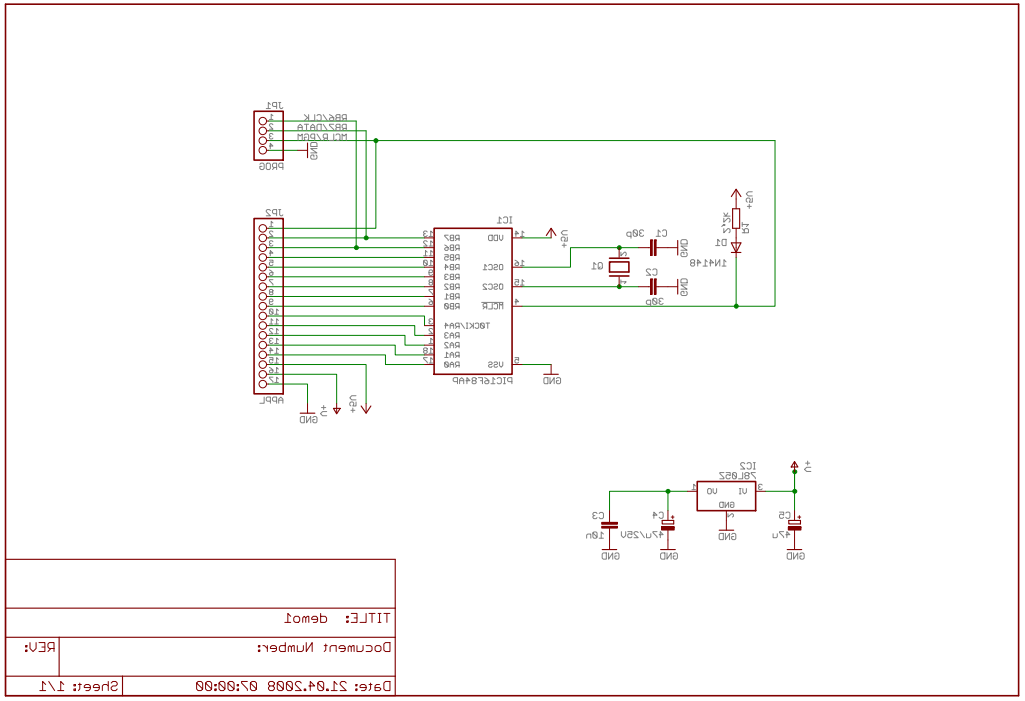

TITLE: demo1

Document Number:

REV:

Date: 21.04.2008 07:00:00 Sheet: 1/1

06.01.2012 20:06:06 f=1.08 mirrored c:\Programme\EAGLE-5.11.0\projects\examples\tutorial\demo1.sch (Sheet: 1/1)

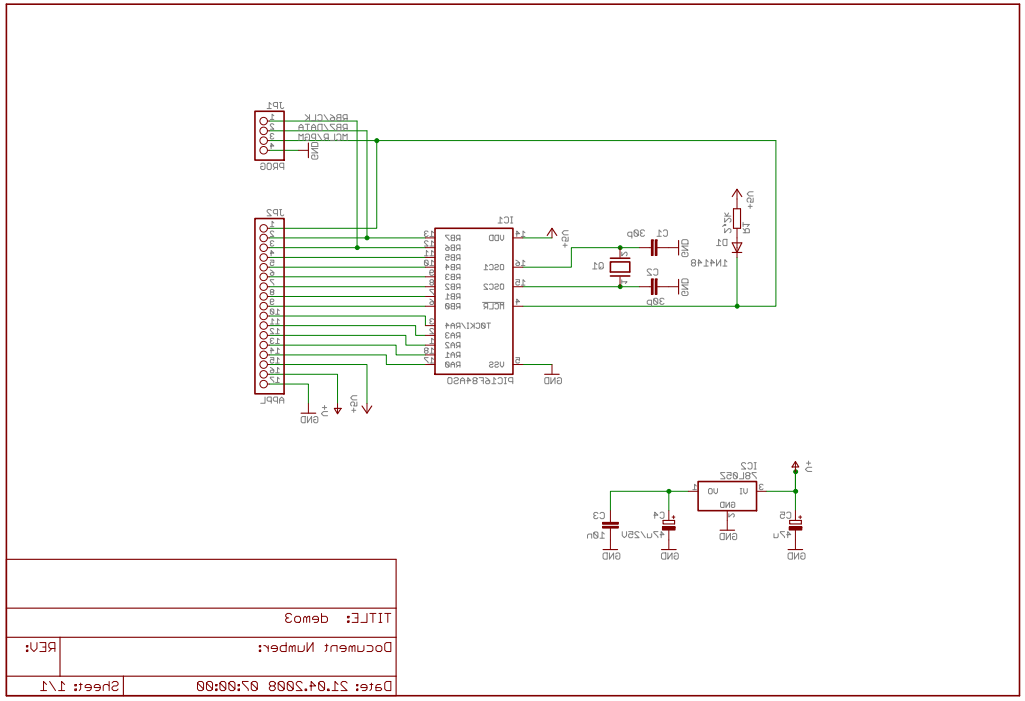

TITLE: demo3

Document Number:

REV:

Date: 21.04.2008 07:00:00 Sheet: 1/1

06.01.2012 20:06:11 f=1.08 mirrored c:\Programme\EAGLE-5.11.0\projects\examples\tutorial\demo3.sch (Sheet: 1/1)

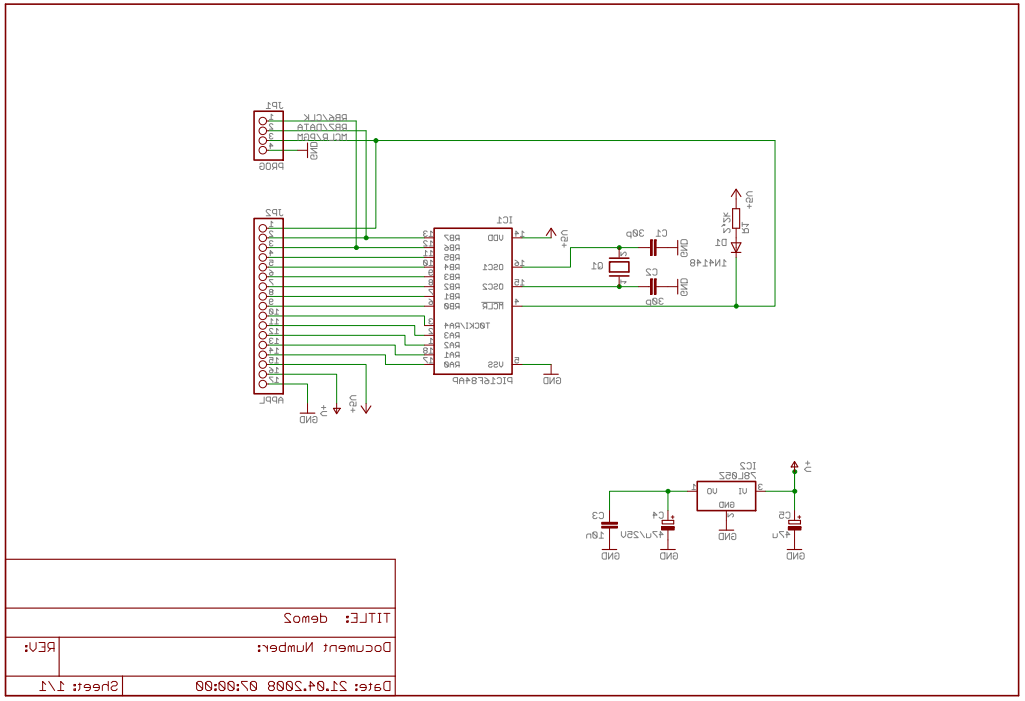

TITLE: demo2

Document Number:

REV:

Date: 21.04.2008 07:00:00 Sheet: 1/1

06.01.2012 20:06:08 f=1.08 mirrored c:\Programme\EAGLE-5.11.0\projects\examples\tutorial\demo2.sch (Sheet: 1/1)