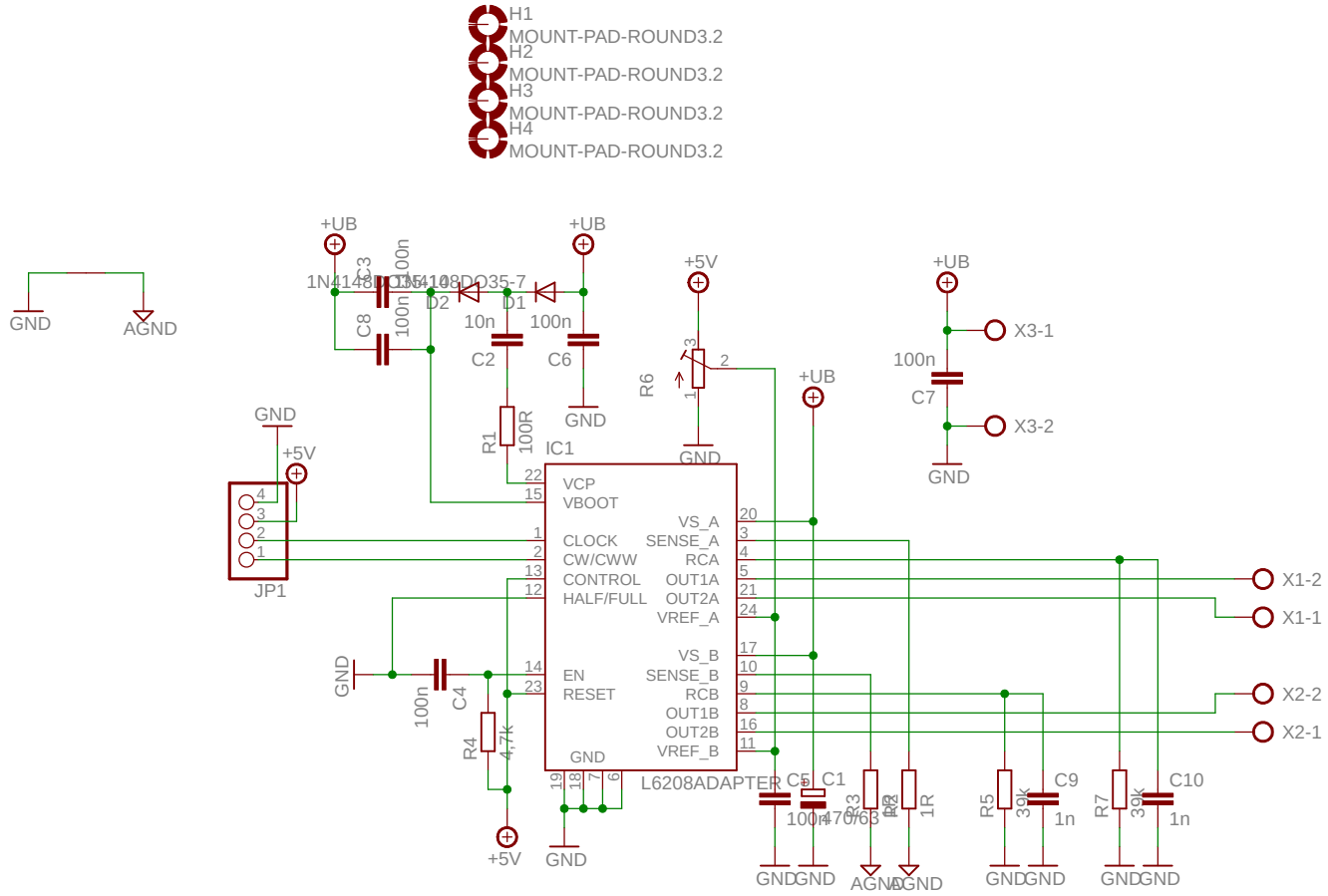
H1
MOUNT-PAD-ROUND3.2
H2
MOUNT-PAD-ROUND3.2
H3
MOUNT-PAD-ROUND3.2
H4
MOUNT-PAD-ROUND3.2
GND
AGND
+UB
C3
100n
1N4148DO35-7
D2
D1
10n
C2
C6
C8
R1
100R
IC1
+5V
R6
X3-1
X3-2
C7
JP1
VCP
VBOOT
CLOCK
CW/CWW
CONTROL
HALF/FULL
EN
RESET
VS_A
SENSE_A
RCA
OUT1A
OUT2A
VREF_A
VS_B
SENSE_B
RCB
OUT1B
OUT2B
VREF_B
L6208ADAPTER
X1-2
X1-1
X2-2
X2-1
C4
R4
4,7k
C5
C1
470/63
R3
1R
R5
39k
C9
1n
R7
C10