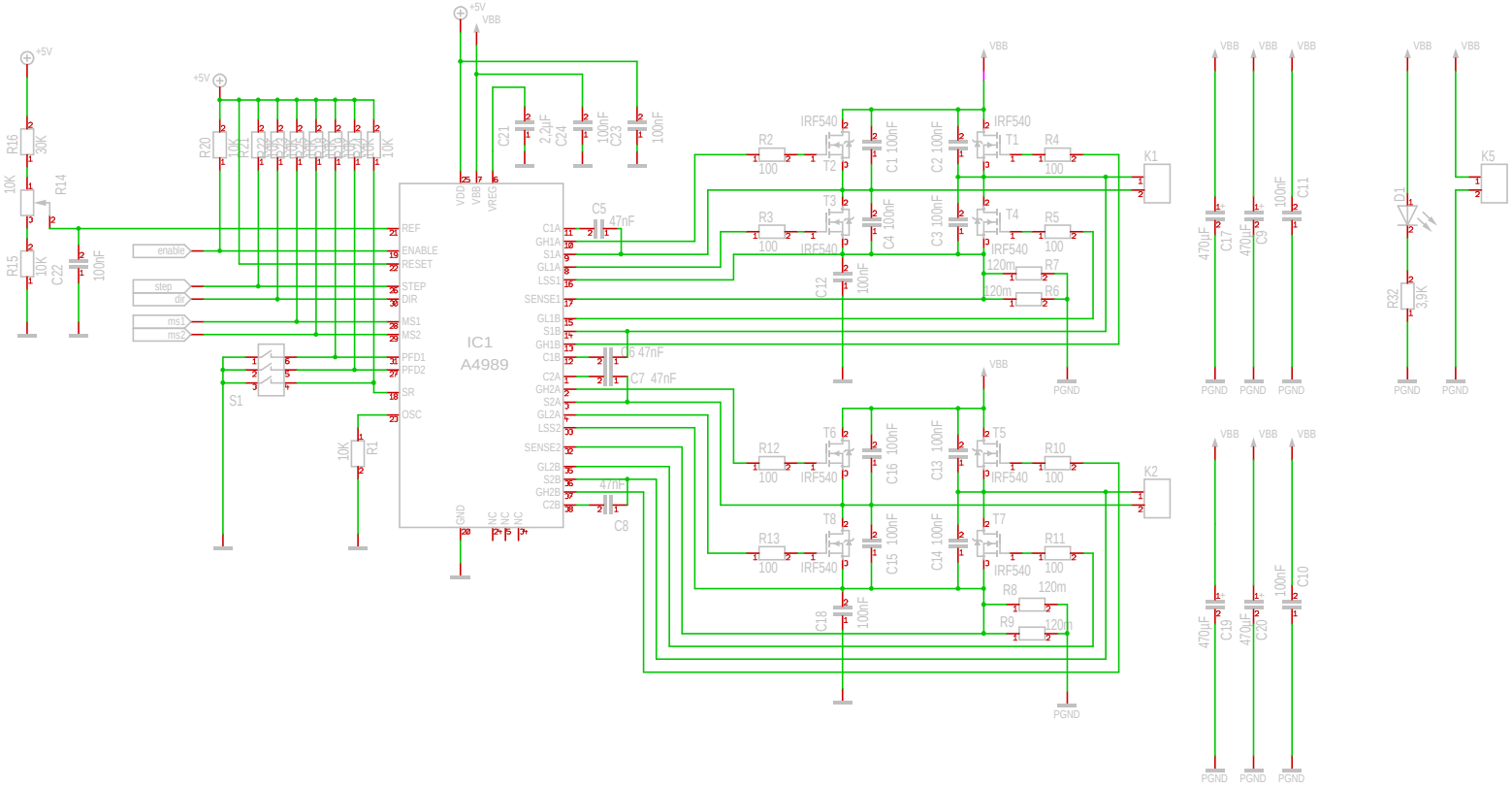
+5V
VBB
R16
30K
R14
10K
R15
10K
C22
100nF
R20
10K
R21
R22
R23
R24
R25
R26
R27
R28
R29
R30
R31
enable
step
dir
ms1
ms2
S1
R1
10K
IC1
A4989
REF
ENABLE
RESET
STEP
DIR
MS1
MS2
PFD1
PFD2
SR
OSC
VDD
VBB
VREG
GND
NC
C1A
GH1A
S1A
GL1A
LSS1
SENSE1
GL1B
S1B
GH1B
C1B
C2A
GH2A
S2A
GL2A
LSS2
SENSE2
GL2B
S2B
GH2B
C2B
C21
2.2µF
C24
100nF
C23
100nF
C5
47nF
C6
47nF
C7
47nF
C8
47nF
IRF540
R2
100
R3
100
R4
100
R5
100
R7
120m
R6
120m
T1
T2
T3
T4
C1
100nF
C2
100nF
C3
100nF
C4
100nF
C12
100nF
PGND
K1
R12
100
R13
100
R10
100
R11
100
R8
120m
R9
120m
T5
T6
T7
T8
C13
100nF
C14
100nF
C15
100nF
C16
100nF
C18
100nF
K2
470uF
C17
C9
C11
C19
C20
C10
D1
R32
3.9K
K5

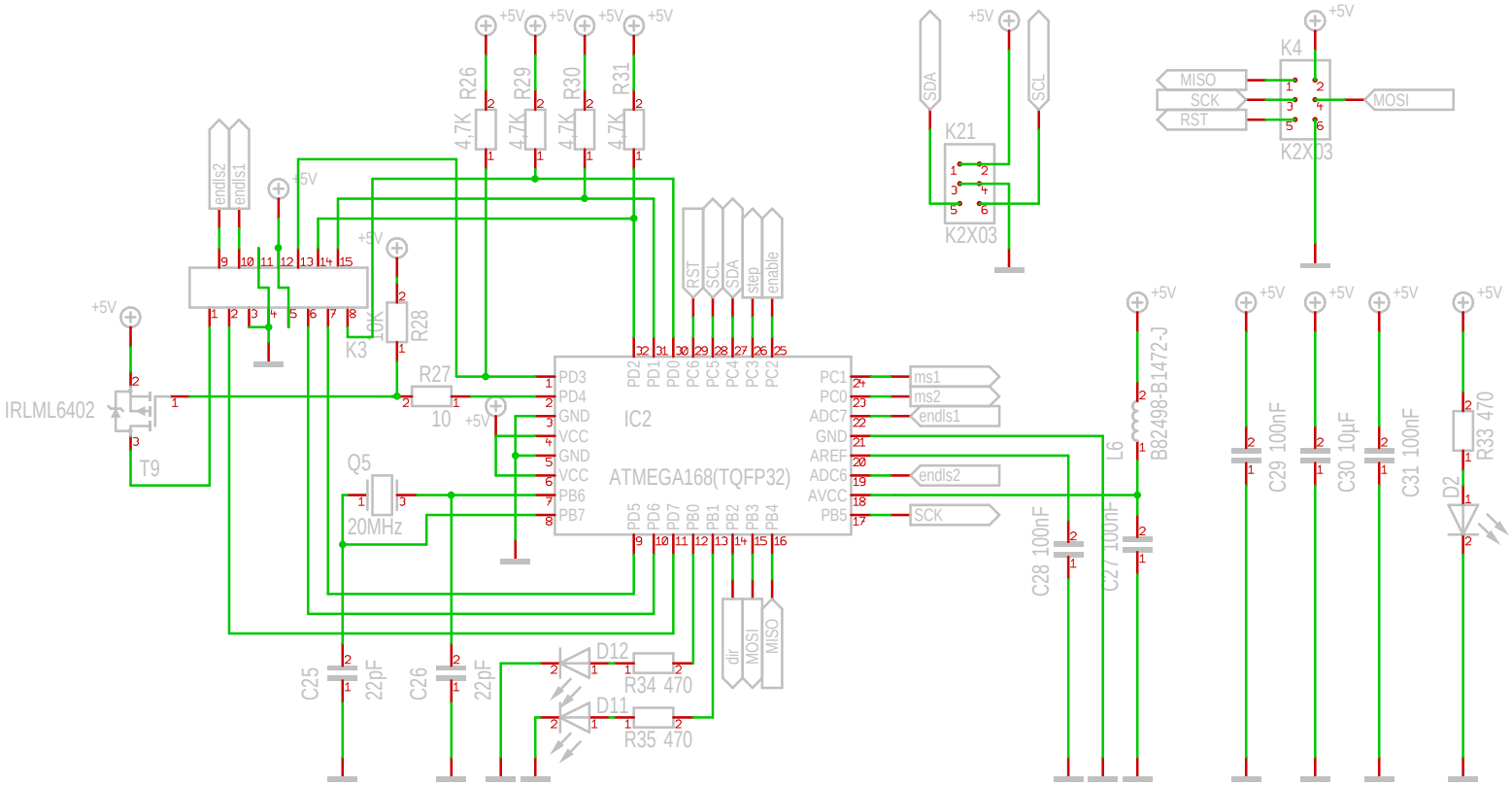
+5V
R26
R29
R30
R31
4,7K
endls2
endls1
K3
10K
R28
R27
10
IRLML6402
T9
Q5
20MHz
C25
22pF
C26
22pF
RST
SCL
SDA
step
enable
IC2
ATMEGA168(TQFP32)
PD3
PD4
GND
VCC
GND
VCC
PB6
PB7
PD2
PD1
PD0
PC6
PC5
PC4
PC3
PC2
PD5
PD6
PD7
PB0
PB1
PB2
PB3
PB4
PC1
PC0
ADC7
GND
AREF
ADC6
AVCC
PB5
ms1
ms2
endls1
endls2
SCK
dir
MOSI
MISO
D12
D11
R34 470
R35 470
K21
K2X03
K4
MISO
SCK
RST
MOSI
L6
B82498-B1472-J
C28 100nF
C27 100nF
C29 100nF
C30 10µF
C31 100nF
D2
R33 470