Figure 4. Off-Line Flyback SMPS with primary regulation, Wide Input Voltage Range, 50W Power Output

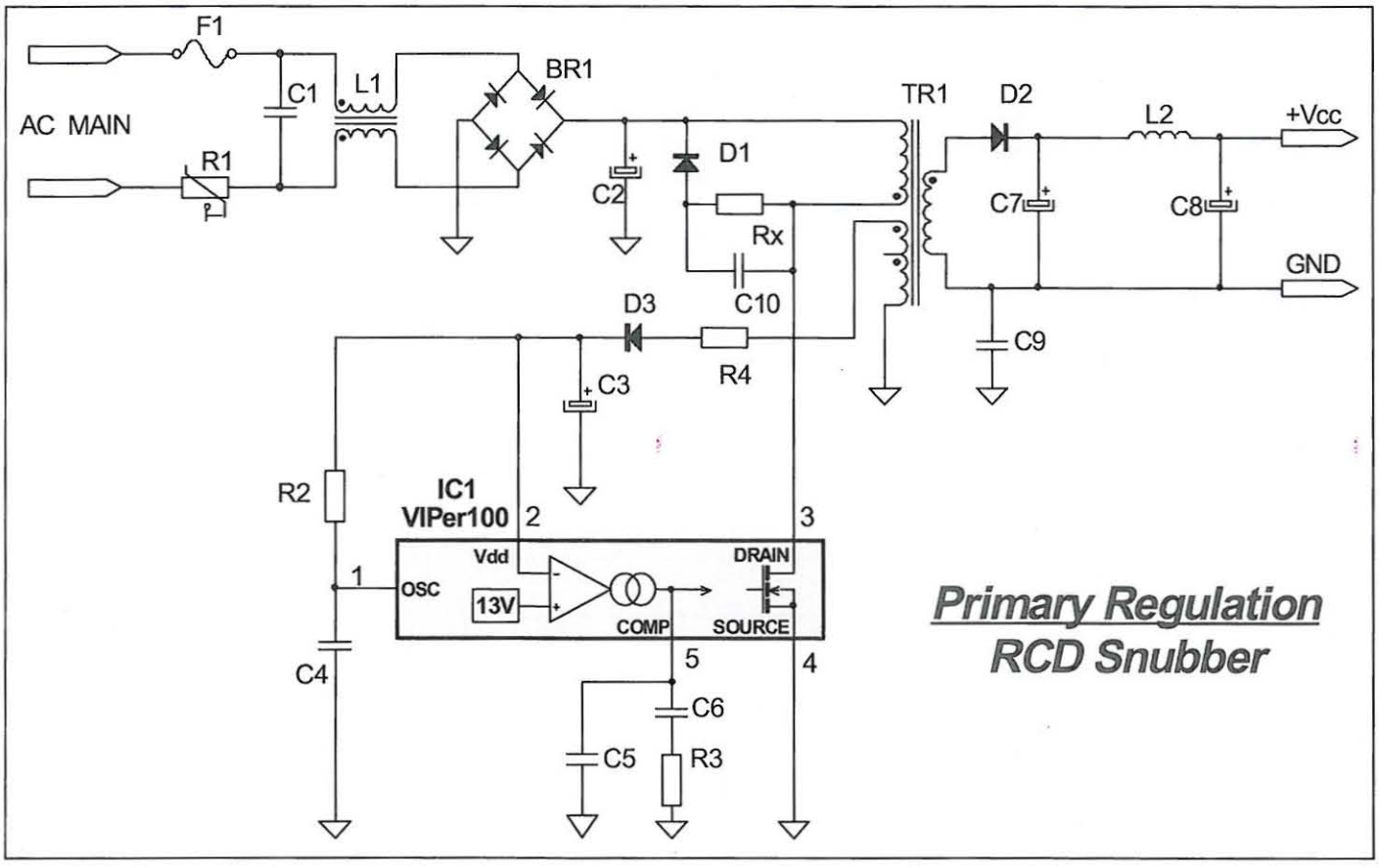

Component List :

F1 = 2A , 250VAC

L1 = RN114-2/02 SCHAFFNER

L2 = 1µH

C1 = 0.1µF, 400VAC

C2 = 150 µF, 400V

C3 = 47 µF, 16 V3.9nF, 200V

C4 = 4.7nF

C5 = 18 nF

C6 = 560nF

C7 = 2,200+1,000 µF - 16V, EKR

C8 = 470µF - 16V, EKR

C9 = 1nF - 400V Class Y

C10 = 5.6nF - 200V

BR1 = 400V, 1A

D1 = BYT11-600

D2 = BYW81-100

D3 = 1N4448

IC1 = VIPer100

R1 = 20Ω

R2 = 5.6KΩ, 1/8W

R3 = 3.9KΩ, 1/8W

R4 = 10Ω, 1/8W

Rx = 2.2KΩ

T1 = Transformer Myrra 74030

L_P = 150µH

N_P/N_S = 7.83 (See Transfomer section)