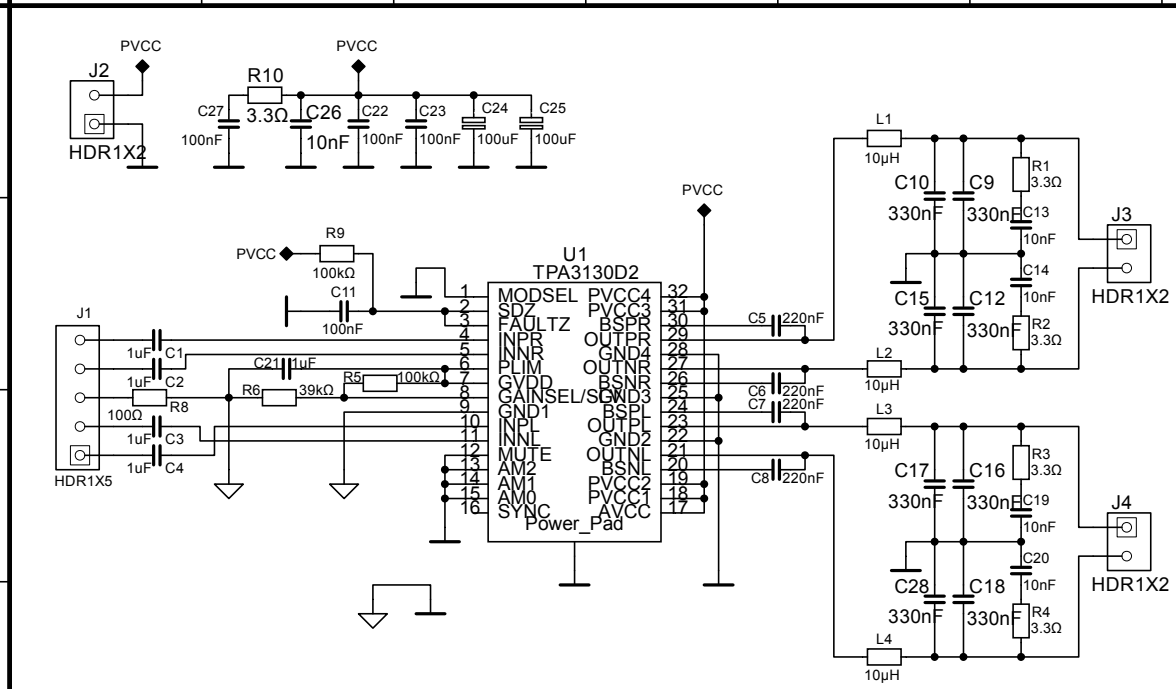
PVCC
J2
HDR1X2
R10
3.3Ω
C27
100nF
C26
10nF
C22
100nF
C23
100nF
C24
100uF
C25
100uF
R9
100kΩ
C11
100nF
J1
HDR1X5
1uF C1
1uF C2
100Ω R8
1uF C3
1uF C4
C21 1uF
R6 39kΩ
R5 100kΩ
U1
TPA3130D2
MODSEL
SDZ
FAULTZ
INPR
INNR
PLIM
GVDD
GAINSEL/SGND
GND1
INPL
INNL
MUTE
AM2
AM1
AM0
SYNC
PVCC4
PVCC3
BSPR
OUTPR
GND4
OUTNR
BSNR
GND3
BSPL
OUTPL
GND2
OUTNL
BSNL
PVCC2
PVCC1
AVCC
Power_Pad
C5 220nF
C6 220nF
C7 220nF
C8 220nF
L1 10μH
L2 10μH
L3 10μH
L4 10μH
C10 330nF
C9 330nF
C15 330nF
C12 330nF
C17 330nF
C16 330nF
C28 330nF
C18 330nF
R1 3.3Ω
R2 3.3Ω
R3 3.3Ω
R4 3.3Ω
C13 10nF
C14 10nF
C19 10nF
C20 10nF
J3
HDR1X2
J4
HDR1X2