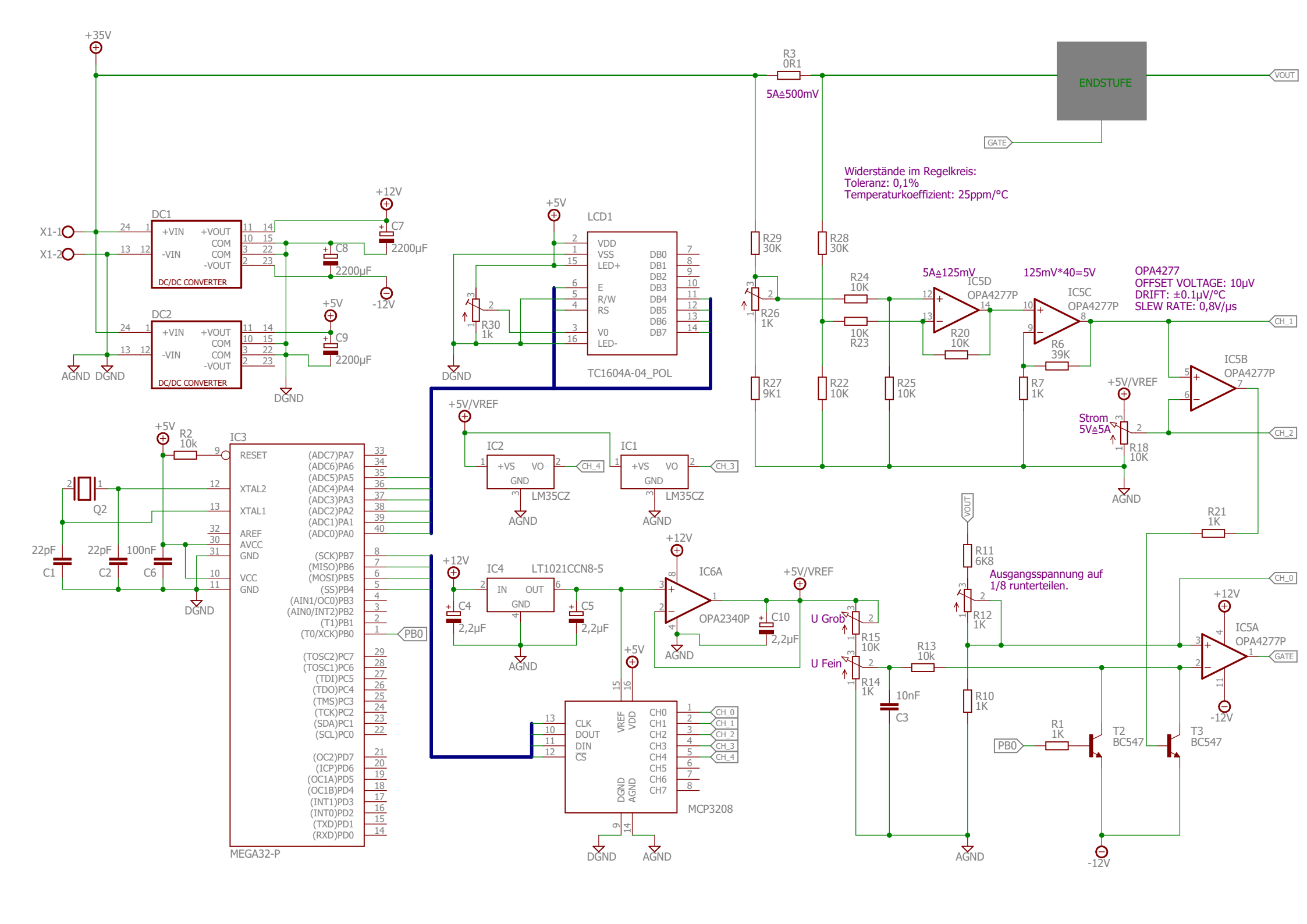
+35V
R3
0R1
5A≙500mV
ENDSTUFE
VOUT
GATE
Widerstände im Regelkreis:
Toleranz: 0,1%
Temperaturkoeffizient: 25ppm/°C
X1-1
X1-2
DC1
DC2
+VIN
-VIN
+VOUT
COM
-VOUT
DC/DC CONVERTER
+12V
-12V
+5V
C7
C8
C9
2200µF
AGND
DGND
LCD1
VDD
VSS
LED+
E
R/W
RS
V0
LED-
DB0
DB1
DB2
DB3
DB4
DB5
DB6
DB7
TC1604A-04_POL
R30
1k
R29
30K
R28
30K
R26
1K
R24
10K
10K
R23
R27
9K1
R22
10K
R25
10K
5A≙125mV
IC5D
OPA4277P
R20
10K
125mV*40=5V
IC5C
OPA4277P
R6
39K
R7
1K
OPA4277
OFFSET VOLTAGE: 10µV
DRIFT: ±0.1µV/°C
SLEW RATE: 0,8V/µs
CH_1
IC5B
OPA4277P
+5V/VREF
Strom
5V≙5A
R18
10K
CH_2
R21
1K
+5V/VREF
IC2
IC1
+VS
VO
GND
LM35CZ
CH_4
CH_3
AGND
R2
10k
IC3
RESET
XTAL2
XTAL1
AREF
AVCC
GND
VCC
GND
Q2
22pF
C1
22pF
C2
100nF
C6
DGND
(ADC7)PA7
(ADC6)PA6
(ADC5)PA5
(ADC4)PA4
(ADC3)PA3
(ADC2)PA2
(ADC1)PA1
(ADC0)PA0
(SCK)PB7
(MISO)PB6
(MOSI)PB5
(SS)PB4
(AIN1/OC0)PB3
(AIN0/INT2)PB2
(T1)PB1
(T0/XCK)PB0
PB0
(TOSC2)PC7
(TOSC1)PC6
(TDI)PC5
(TDO)PC4
(TMS)PC3
(TCK)PC2
(SDA)PC1
(SCL)PC0
(OC2)PD7
(ICP)PD6
(OC1A)PD5
(OC1B)PD4
(INT1)PD3
(INT0)PD2
(TXD)PD1
(RXD)PD0
MEGA32-P
+12V
IC4
LT1021CCN8-5
IN
OUT
GND
C4
2,2µF
C5
2,2µF
IC6A
OPA2340P
C10
2,2µF
+5V/VREF
U Grob
R15
10K
U Fein
R14
1K
R13
10k
10nF
C3
R11
6K8
R12
1K
R10
1K
Ausgangsspannung auf
1/8 runterteilen.
CH_0
IC5A
OPA4277P
GATE
R1
1K
T2
BC547
T3
BC547
CLK
DOUT
DIN
CS
VREF
VDD
DGND
AGND
CH0
CH1
CH2
CH3
CH4
CH5
CH6
CH7
MCP3208