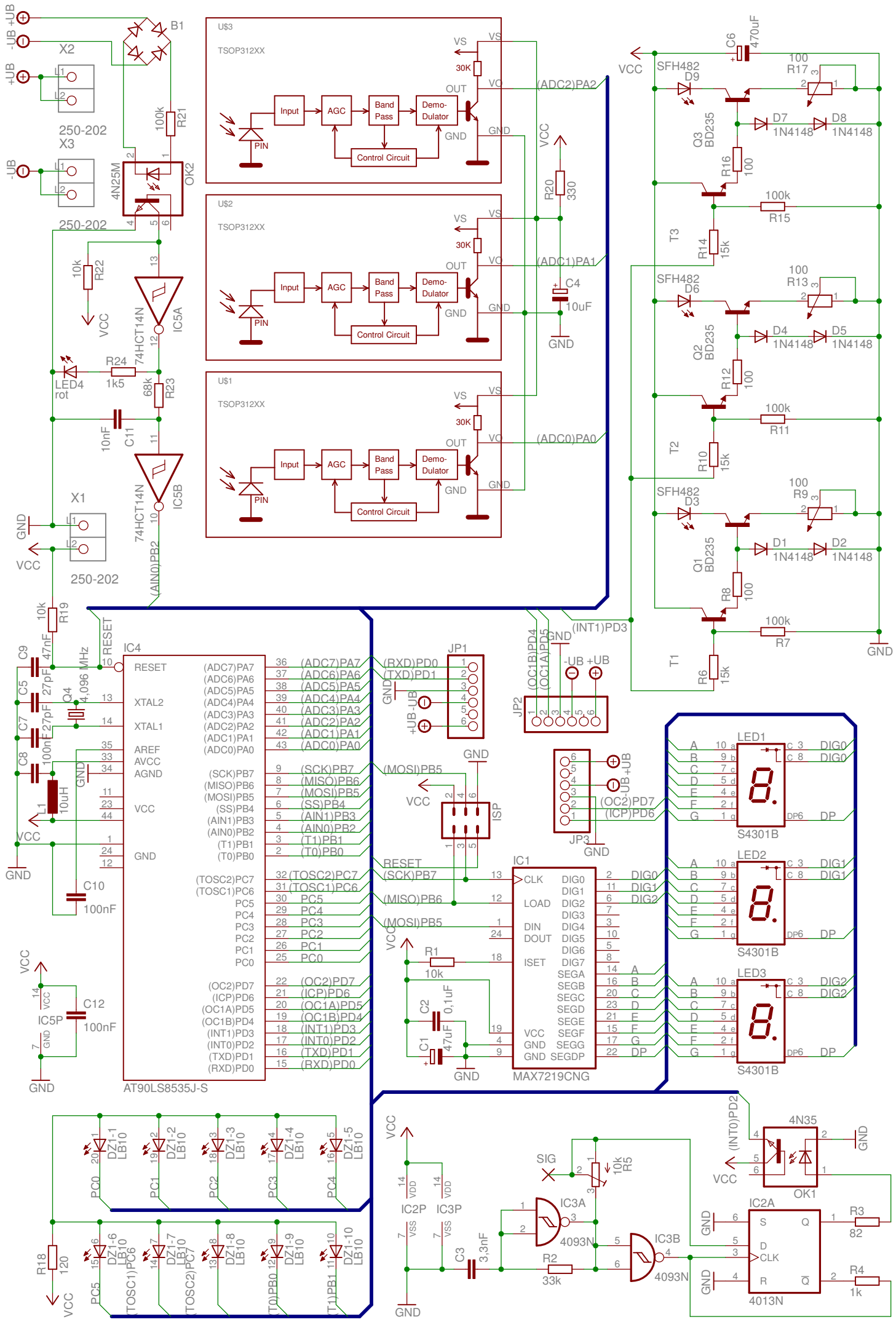
U$3
TSOP312XX
U$2
TSOP312XX
U$1
TSOP312XX
Input
AGC
Band Pass
Demo-Dulator
Control Circuit
PIN
VS
VO
OUT
GND
30K
(ADC2)PA2
(ADC1)PA1
(ADC0)PA0
B1
X2
250-202
X3
250-202
X1
250-202
4N25M
OK2
100k
R21
10k
R22
VCC
74HCT14N
IC5A
IC5B
R24
1k5
LED4
rot
68k
R23
10nF
C11
(AIN0)PB2
R20
330
C4
10uF
C6
470uF
SFH482
D9
D6
D3
R17
R13
R9
100
D7
D8
1N4148
D4
D5
D1
D2
Q3
BD235
Q2
Q1
R16
R12
R8
R15
R11
R7
T3
T2
T1
R14
R10
R6
15k
R19
10k
C9
47nF
C5
27pF
C7
27pF
C8
100nF
Q4
4,096 MHz
L1
10uH
RESET
IC4
XTAL2
XTAL1
AREF
AVCC
AGND
VCC
GND
C10
100nF
AT90LS8535J-S
(ADC7)PA7
(ADC6)PA6
(ADC5)PA5
(ADC4)PA4
(ADC3)PA3
(ADC2)PA2
(ADC1)PA1
(ADC0)PA0
(SCK)PB7
(MISO)PB6
(MOSI)PB5
(SS)PB4
(AIN1)PB3
(AIN0)PB2
(T1)PB1
(T0)PB0
(TOSC2)PC7
(TOSC1)PC6
PC5
PC4
PC3
PC2
PC1
PC0
(OC2)PD7
(ICP)PD6
(OC1A)PD5
(OC1B)PD4
(INT1)PD3
(INT0)PD2
(TXD)PD1
(RXD)PD0
JP1
JP2
JP3
ISP
IC5P
C12
100nF
R1
10k
C2
0,1uF
C1
47uF
IC1
MAX7219CNG
CLK
LOAD
DIN
DOUT
ISET
DIG0
DIG1
DIG2
DIG3
DIG4
DIG5
DIG6
DIG7
SEGA
SEGB
SEGC
SEGD
SEGE
SEGF
SEGG
SEGDP
LED1
LED2
LED3
S4301B
DP
DZ1-1 LB10
DZ1-2 LB10
DZ1-3 LB10
DZ1-4 LB10
DZ1-5 LB10
DZ1-6 LB10
DZ1-7 LB10
DZ1-8 LB10
DZ1-9 LB10
DZ1-10 LB10
R18
120
IC2P
IC3P
C3
3,3nF
SIG
R5
10k
IC3A
4093N
R2
33k
IC3B
4093N
4N35
OK1
IC2A
4013N
R3
82
R4
1k