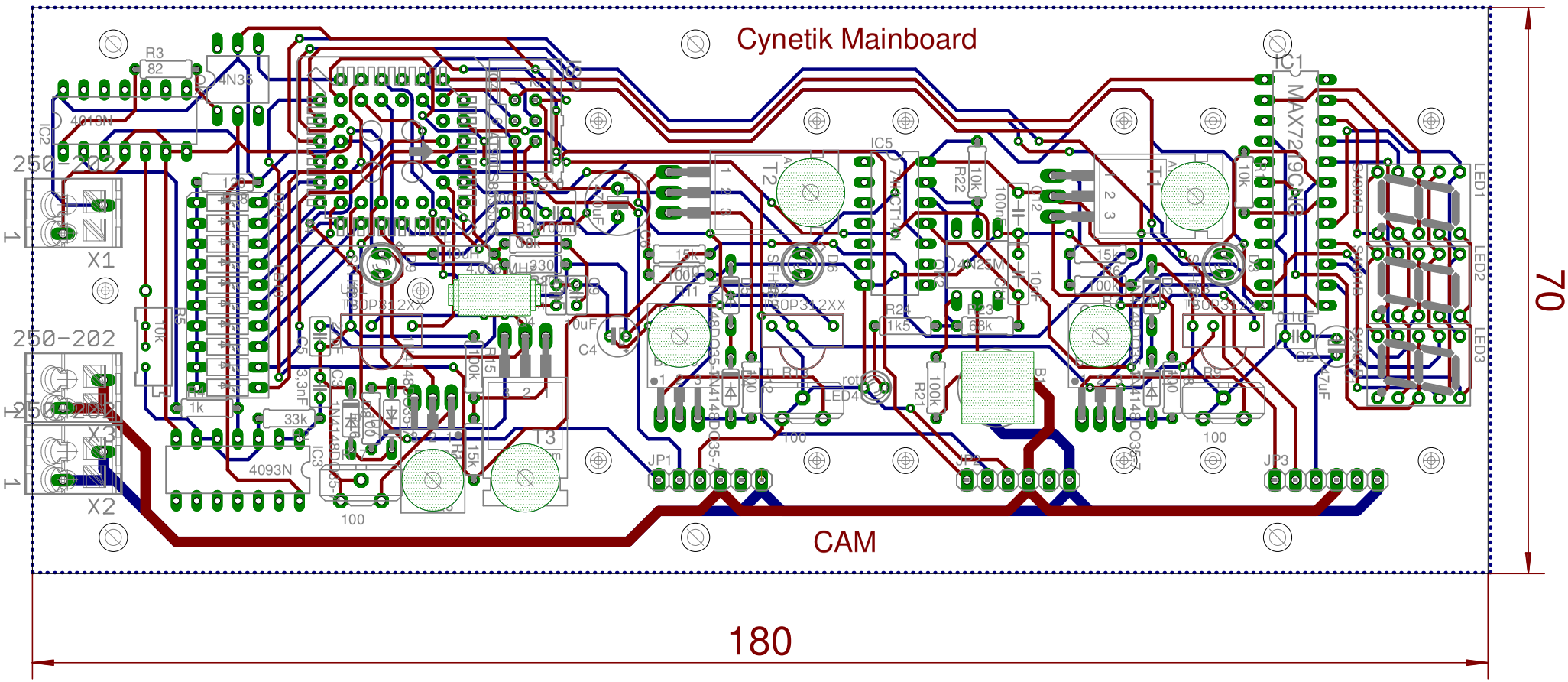
Cynetik Mainboard
CAM
70
180
250-202
X1
X2
X3
IC1
IC2
IC3
IC5
T1
T2
T3
LED1
LED2
LED3
LED4
JP1
JP2
JP3
R3
82
4N35
4093N
4013N
33k
1k
10k
15k
100
100uF
C4
C5
C6
C7
C8
C9
C10
C11
C12
C13
C14
C15
C16
C17
C18
C19
C20
R21
R22
R23
R24
1k5
68k
100k
100nF
10nF
4N25M
TBOP312XX
MAX7219CNG
B1
rot