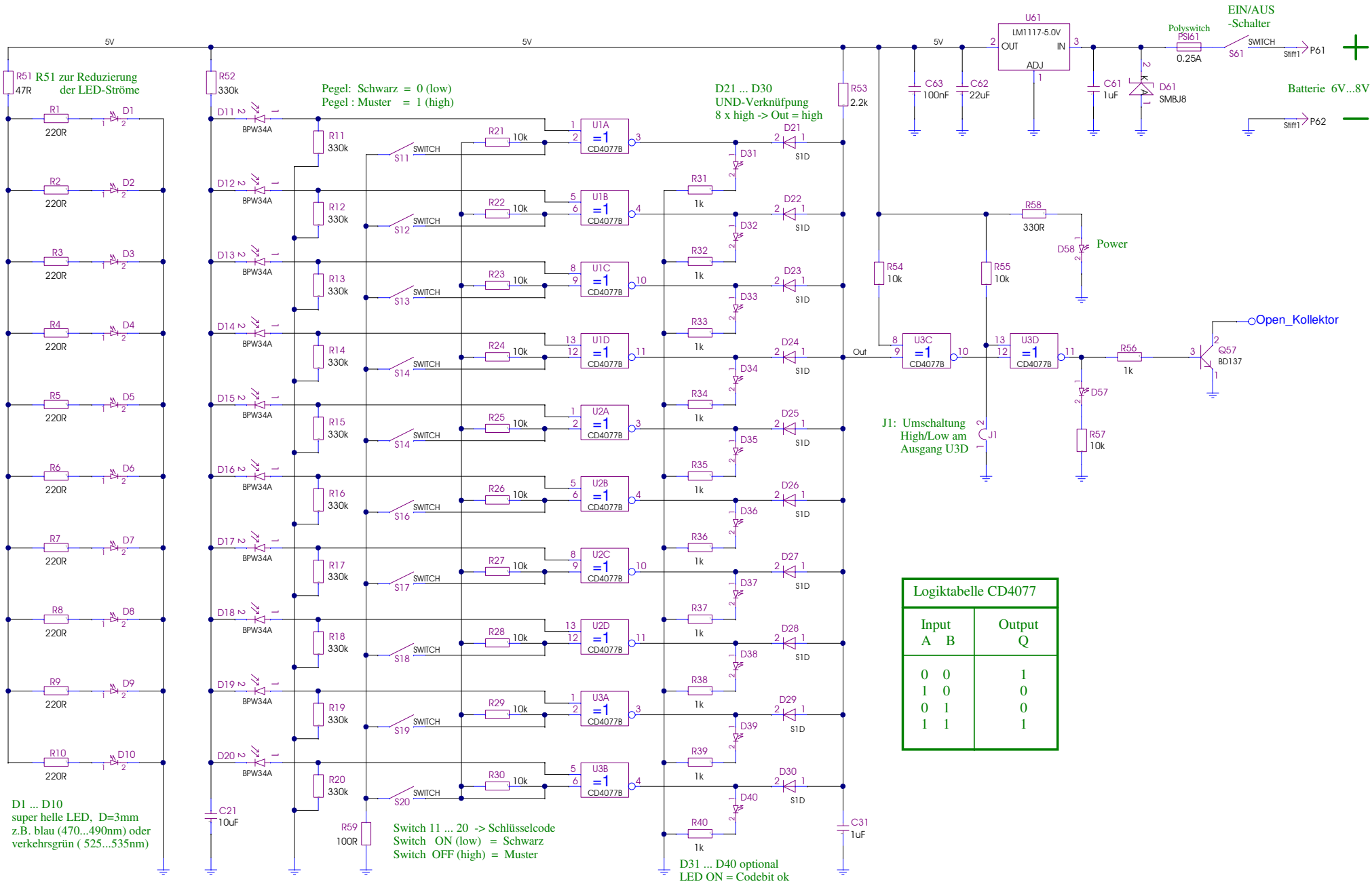

Logiktabelle CD4077	
Input A B	Output Q
0 0	1
1 0	0
0 1	0
1 1	1