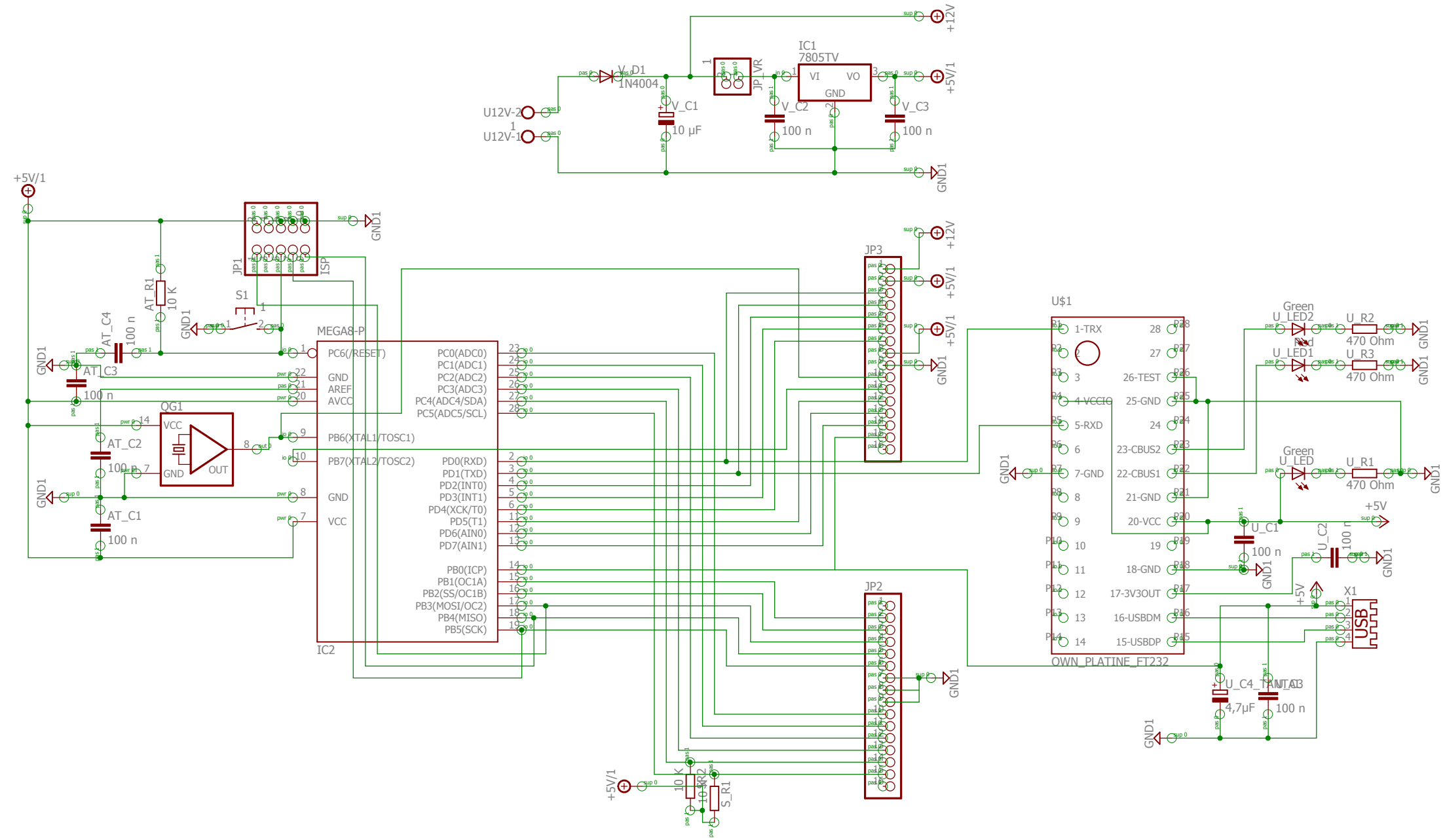
+12V
+5V/1
GND1
IC1
7805TV
VI
VO
GND
V_D1
1N4004
JP_VR
V_C1
10 µF
V_C2
100 n
V_C3
100 n
U12V-2
U12V-1
+5V/1
JP1
ISP
S1
AT_R1
10 K
AT_C4
100 n
AT_C3
100 n
QG1
VCC
GND
OUT
AT_C2
100 n
AT_C1
100 n
MEGA8-P
PC6(/RESET)
GND
AREF
AVCC
PB6(XTAL1/TOSC1)
PB7(XTAL2/TOSC2)
GND
VCC
PC0(ADC0)
PC1(ADC1)
PC2(ADC2)
PC3(ADC3)
PC4(ADC4/SDA)
PC5(ADC5/SCL)
PD0(RXD)
PD1(TXD)
PD2(INT0)
PD3(INT1)
PD4(XCK/T0)
PD5(T1)
PD6(AIN0)
PD7(AIN1)
PB0(ICP)
PB1(OC1A)
PB2(SS/OC1B)
PB3(MOSI/OC2)
PB4(MISO)
PB5(SCK)
IC2
JP3
JP2
10 K
R2
10 K
S_R1
U$1
1-TRX
3
4-VCCIO
5-RXD
6
7-GND
8
9
10
11
12
13
14
28
27
26-TEST
25-GND
24
23-CBUS2
22-CBUS1
21-GND
20-VCC
19
18-GND
17-3V3OUT
16-USBDM
15-USBDP
OWN_PLATINE_FT232
Green
U_LED2
Red
U_R2
470 Ohm
U_LED1
U_R3
470 Ohm
Green
U_LED
U_R1
470 Ohm
+5V
U_C1
100 n
U_C2
100 n
X1
USB
U_C4_TANTAL
4,7µF
U_C3
100 n