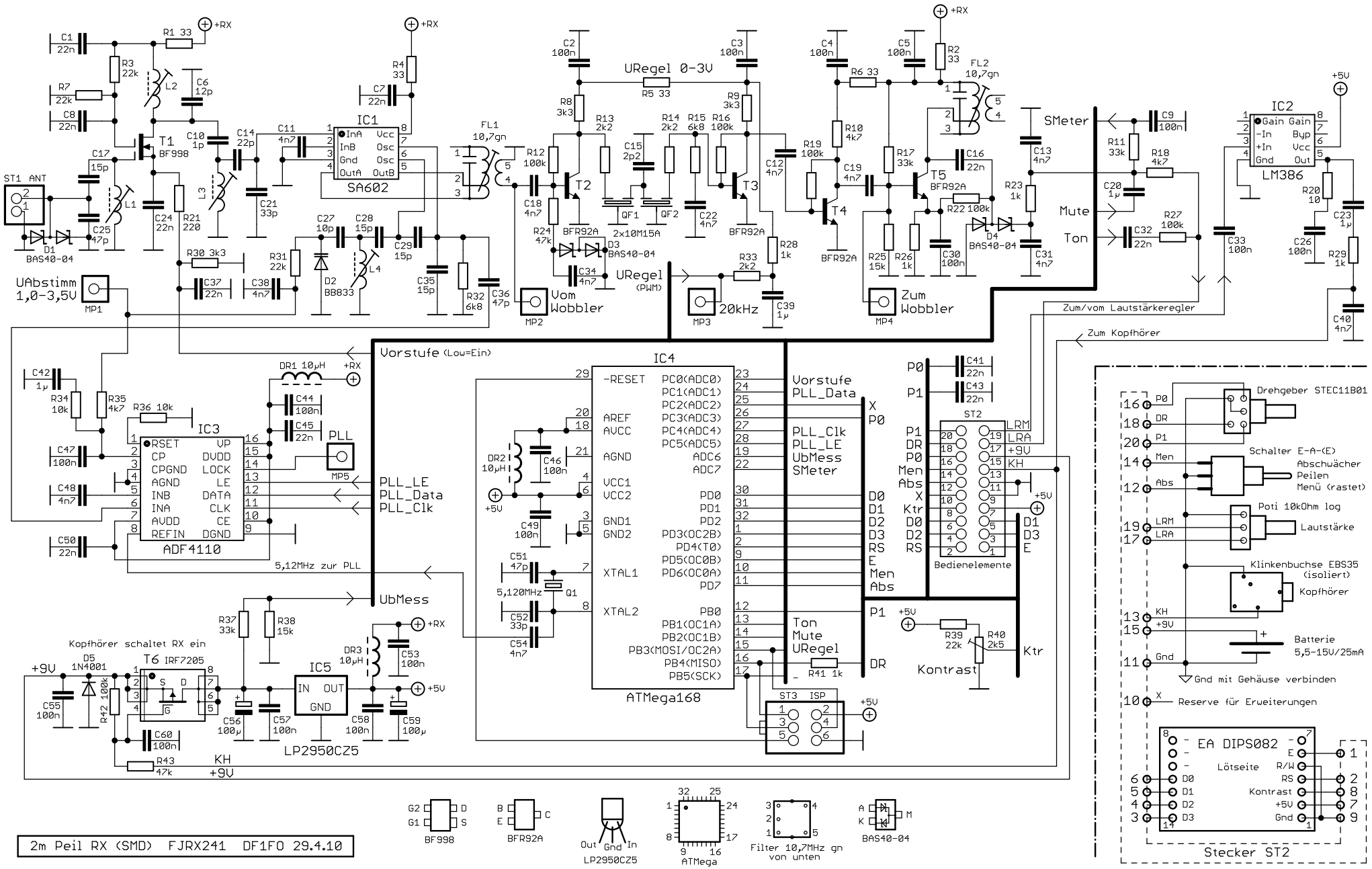

09.05.16 18:35 /tmp/FJRX24.sch (Sheet: 1/1)