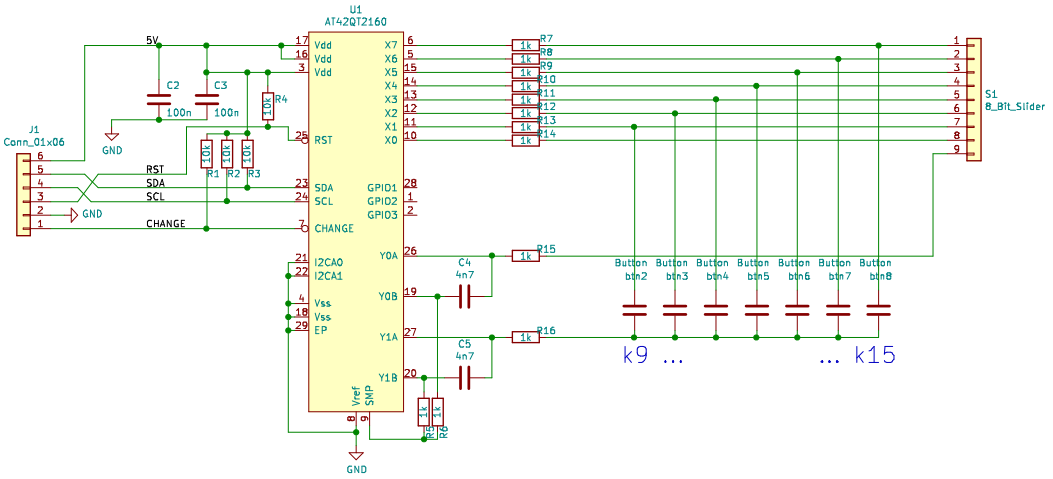

Sheet: /
File: AT42QT2160_TouchPanel.sch

Title:

Size: A4	Date:	Rev:
KiCad E.D.A. kicad (5.0-dev-4060-g28f1209ce)		Id: 1/1