P/O H9037PCB

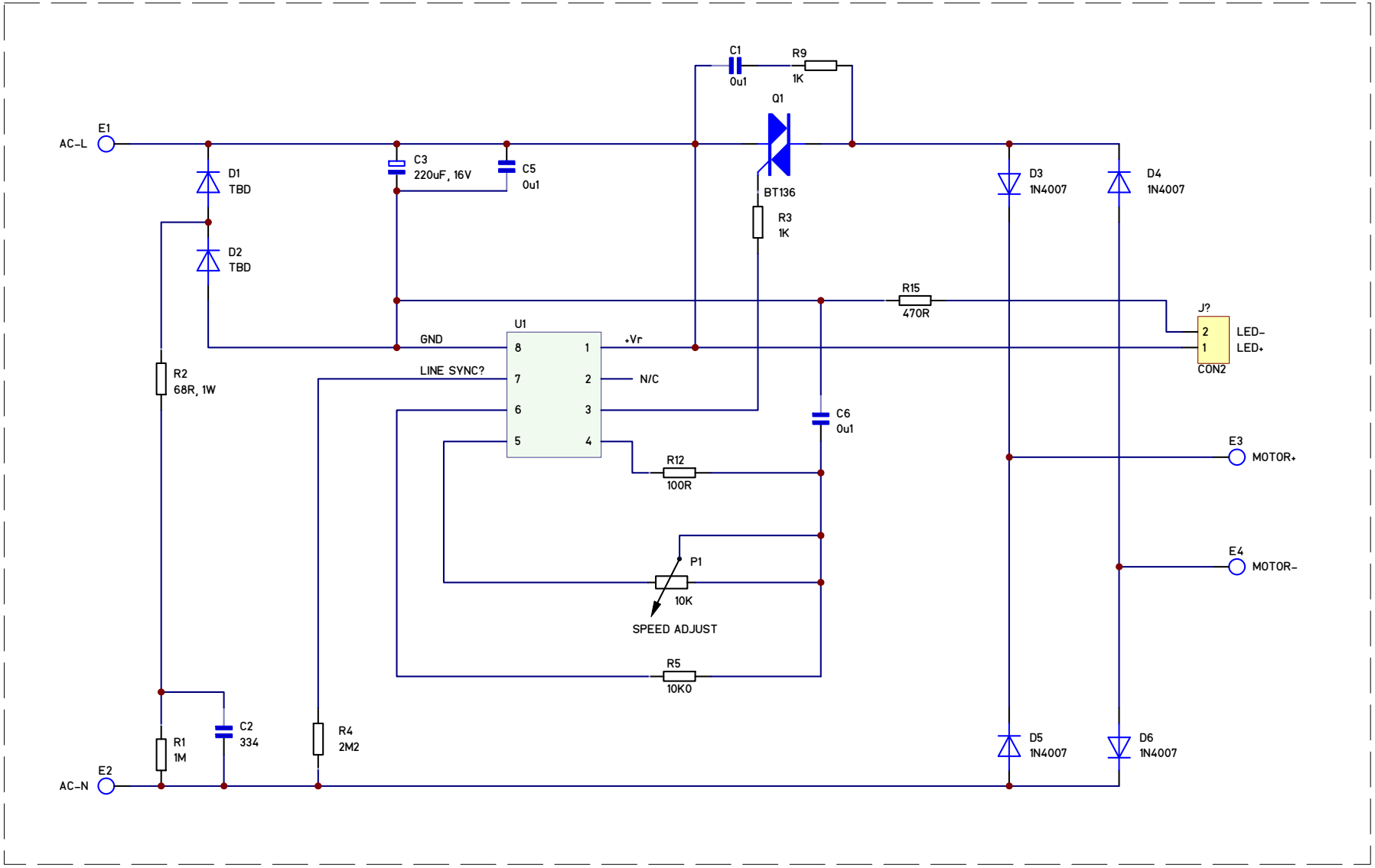

Unless otherwise specified, all values are as follows:
resistor values are in Ohms, i.e. 0R47, 5R6, 220, 5K6, 22K
capacitor values are in Microfarads, i.e. 220p, 0u1, 2u2, 33
inductor values are in Microhenries, i.e. 0u22, 5u6, 68, 2m2

This drawing is our property. Duplication, unauthorized use of any kind is prohibited.

Without Approval use only for inquiry.

Approval:

	Date	Name
Drawn	2019-07-02	GJO
Modified	2-Jul-2019	
Checked		

☐ Prototype ☒ Production NO BOM Done?

Change Index	Change Notification Nr.	Date	Name

PCB Name: *Speed Control Board*
PCB Nr. *H9037PCB*
PCB Type: FR3 1L 1SM 1LL 1.5mm

Title: *Simplicity Del. Cutter Speed Control*

Used in: Simplicity Deluxe | Repl.for: N/A | Build No. 1

Scale: EL | Prj. Nr: *12001*

Drw. Type: PCB Schematic

Size: A | Rev: *1* | Drw. Nr: *4415-0000*

File: *SpeedCtl.sch* | Sheet *1* of *1*

Requires TGL-017 Font