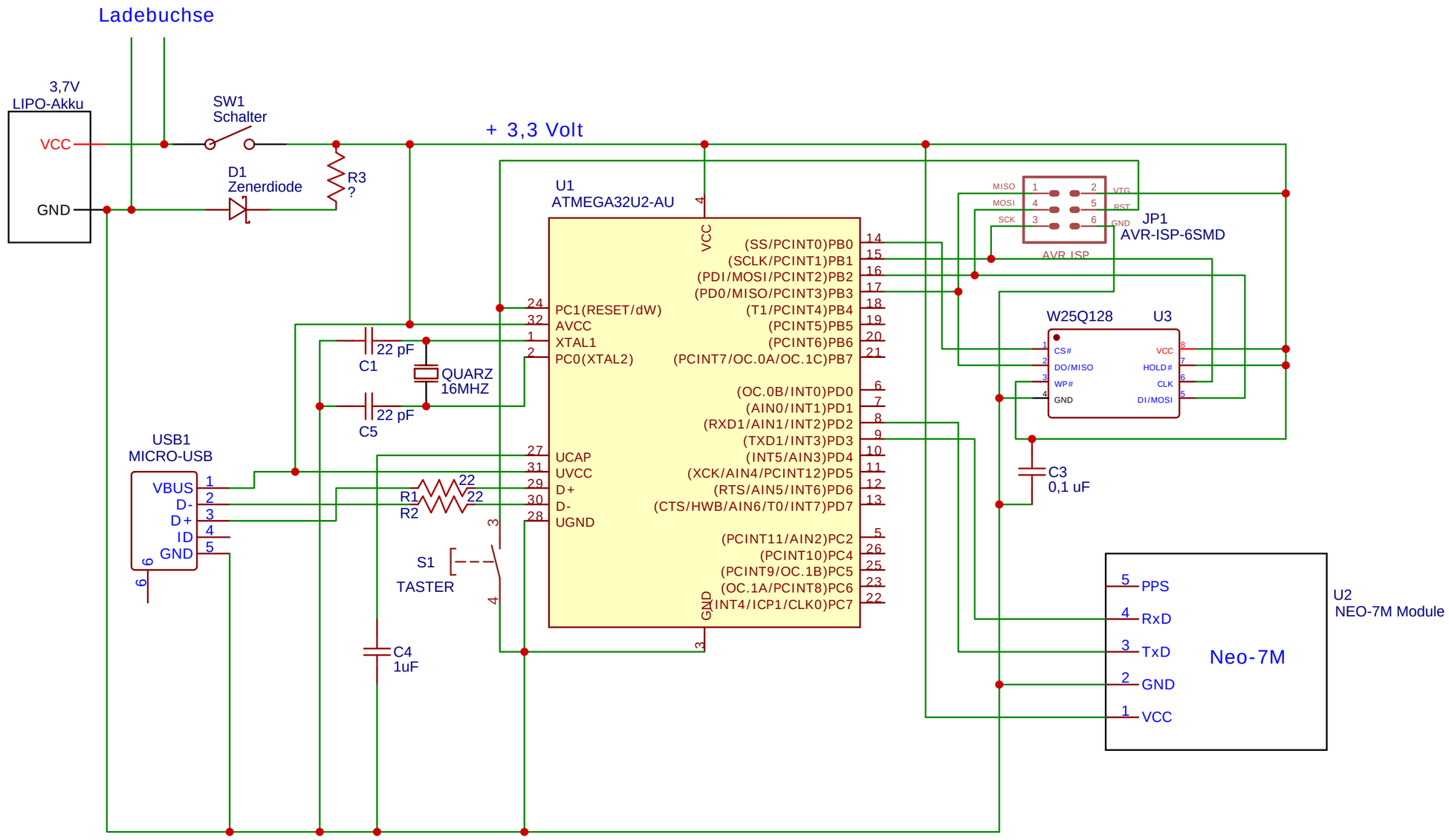

TITLE: Versuchaufbau 1	REV: 1.0
EasyEDA — Company: Your Company	Sheet: 1/1
Date: 2020-03-30 Drawn By: Jonathan108	