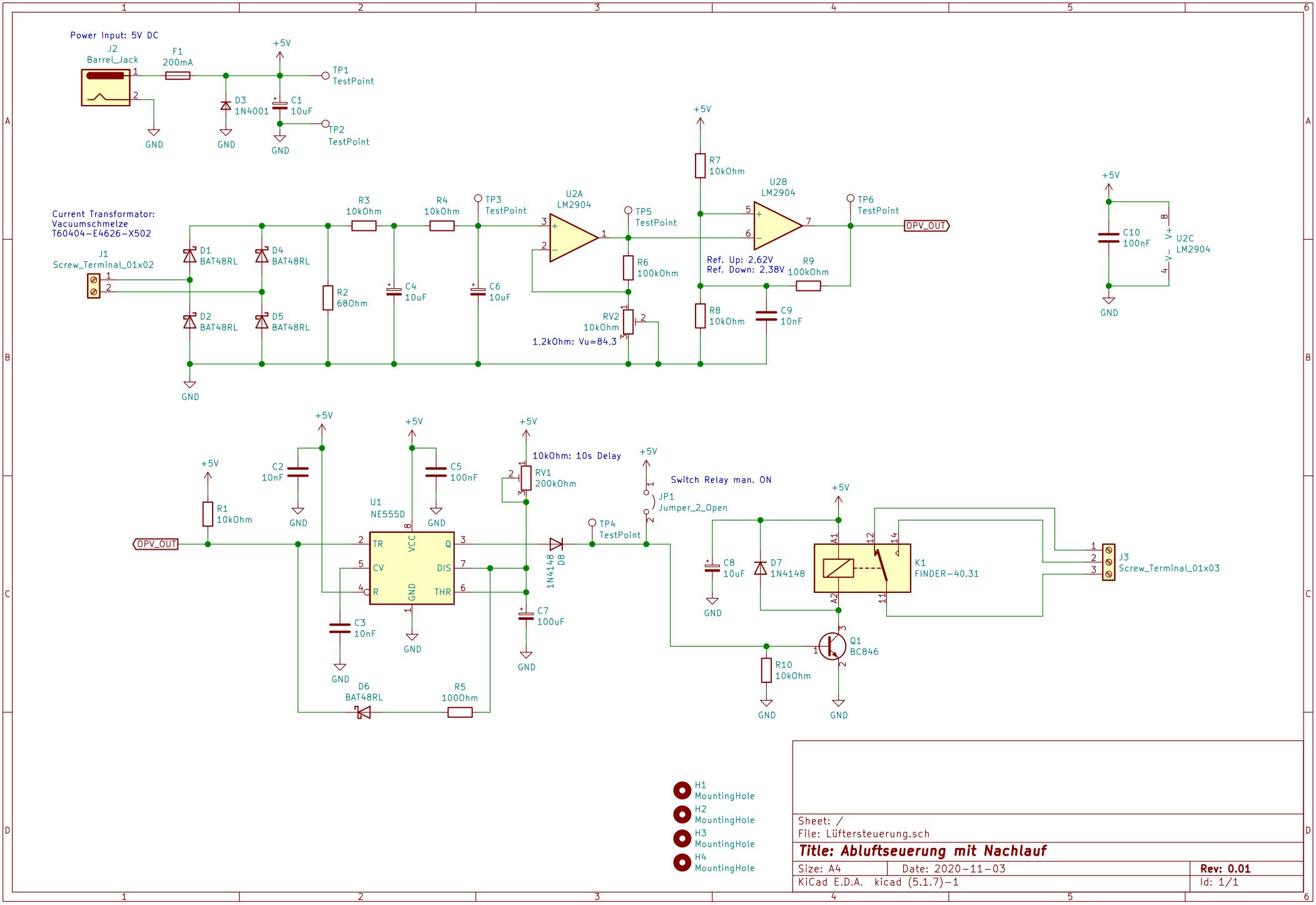
Power Input: 5V DC
J2
Barrel_Jack
F1
200mA
+5V
TP1
TestPoint
D3
1N4001
C1
10uF
TP2
TestPoint
GND
Current Transformator:
Vacuumschmelze
T60404-E4626-X502
J1
Screw_Terminal_01x02
D1
BAT48RL
D2
BAT48RL
D4
BAT48RL
D5
BAT48RL
R2
680hm
R3
10kOhm
R4
10kOhm
C4
10uF
C6
10uF
TP3
TestPoint
U2A
LM2904
TP5
TestPoint
R6
100kOhm
RV2
10kOhm
1,2kOhm: Vu=84,3
R7
10kOhm
U2B
LM2904
TP6
TestPoint
OPV_OUT
Ref. Up: 2,62V
Ref. Down: 2,38V
R9
100kOhm
R8
10kOhm
C9
10nF
C10
100nF
U2C
LM2904
R1
10kOhm
C2
10nF
C5
100nF
U1
NE555D
TR
CV
R
VCC
GND
Q
DIS
THR
C3
10nF
D6
BAT48RL
R5
100Ohm
10kOhm: 10s Delay
RV1
200kOhm
1N4148
D8
C7
100uF
TP4
TestPoint
JP1
Jumper_2_Open
Switch Relay man. ON
C8
10uF
D7
1N4148
K1
FINDER-40.31
J3
Screw_Terminal_01x03
Q1
BC846
R10
10kOhm
H1
MountingHole
H2
MountingHole
H3
MountingHole
H4
MountingHole
Sheet: /
File: Lüftersteuerung.sch
Title: Abluftseuerung mit Nachlauf
Size: A4
Date: 2020-11-03
Rev: 0.01
KiCad E.D.A. kicad (5.1.7)-1
Id: 1/1