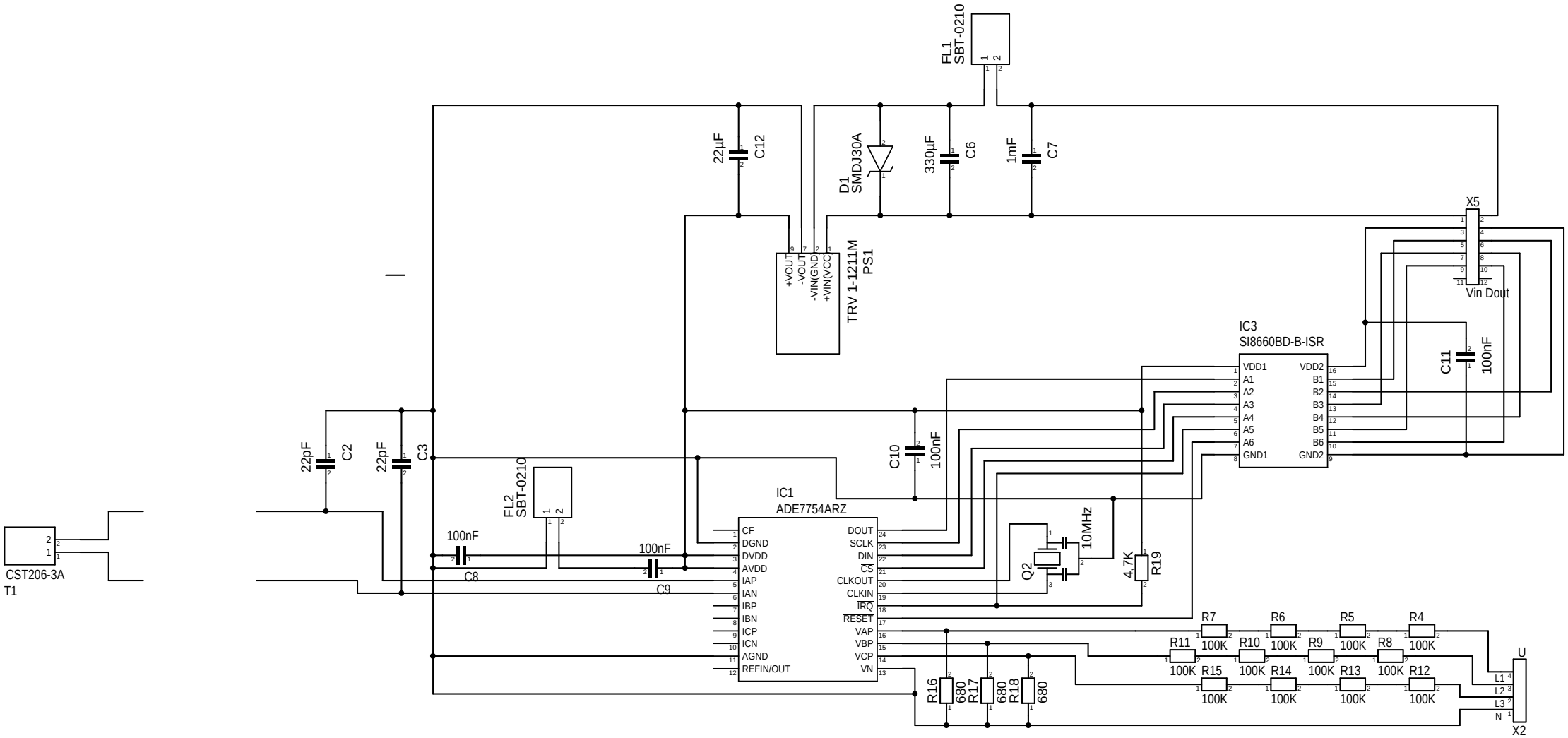
FL1
SBT-0210
22µF
C12
D1
SMDJ30A
330µF
C6
1mF
C7
X5
+VOUT
-VOUT
-VIN(GND)
+VIN(VCC)
TRV 1-1211M
PS1
Vin Dout
IC3
SI8660BD-B-ISR
VDD1
A1
A2
A3
A4
A5
A6
GND1
VDD2
B1
B2
B3
B4
B5
B6
GND2
C11
100nF
22pF
C2
22pF
C3
C10
100nF
FL2
SBT-0210
IC1
ADE7754ARZ
CF
DGND
DVDD
AVDD
IAP
IAN
IBP
IBN
ICP
ICN
AGND
REFIN/OUT
DOUT
SCLK
DIN
CS
CLKOUT
CLKIN
IRQ
RESET
VAP
VBP
VCP
VN
100nF
C8
100nF
C9
Q2
10MHz
4,7K
R19
R7
100K
R6
100K
R5
100K
R4
100K
R11
100K
R10
100K
R9
100K
R8
100K
R15
100K
R14
100K
R13
100K
R12
100K
R16
680
R17
680
R18
680
U
L1
L2
L3
N
X2
CST206-3A
T1