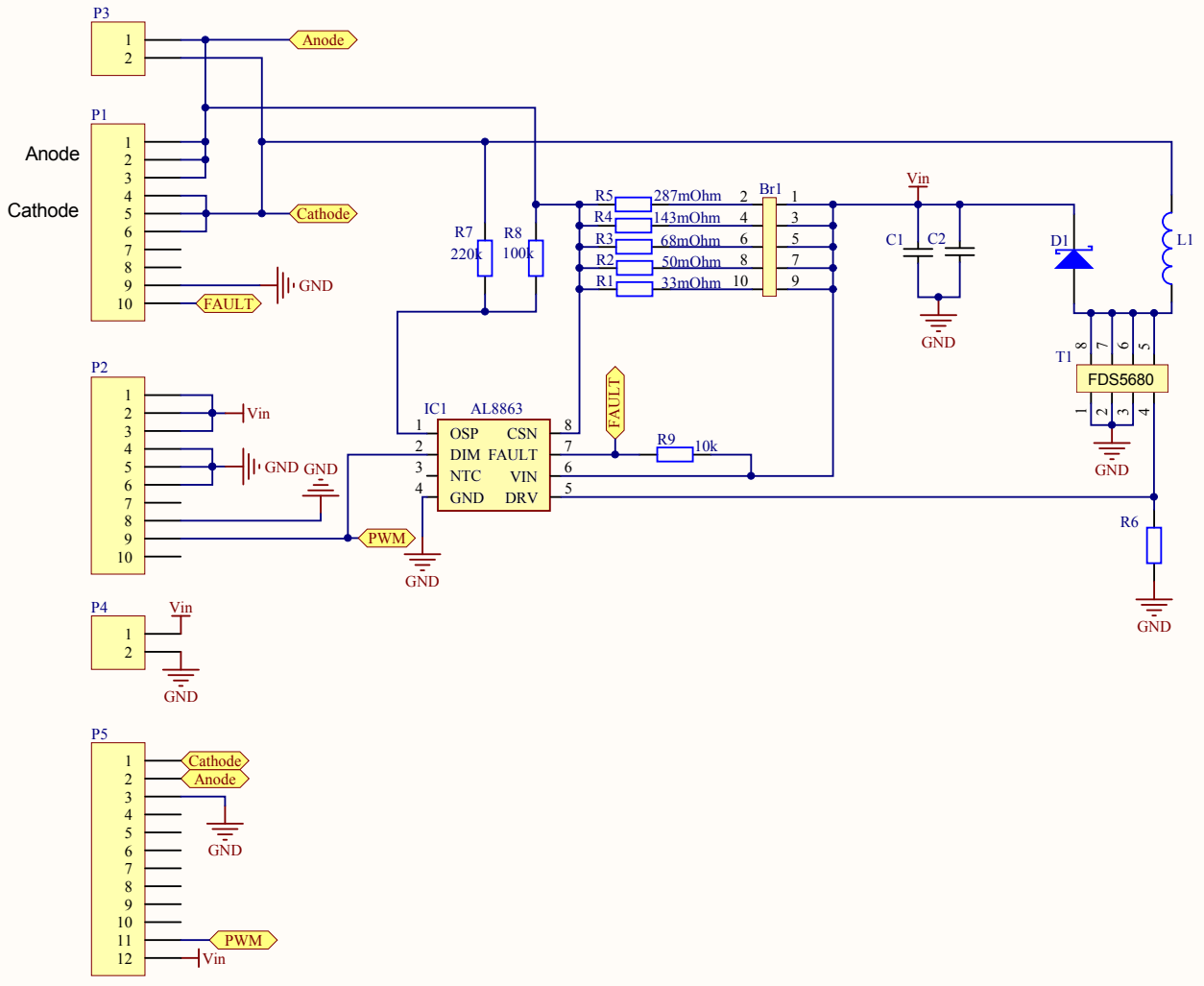

Title		
Size A4	Number	Revision 1.1
Date: 29.06.2021		Sheet of
File: \\..\LT-5524.SchDoc		Drawn By:

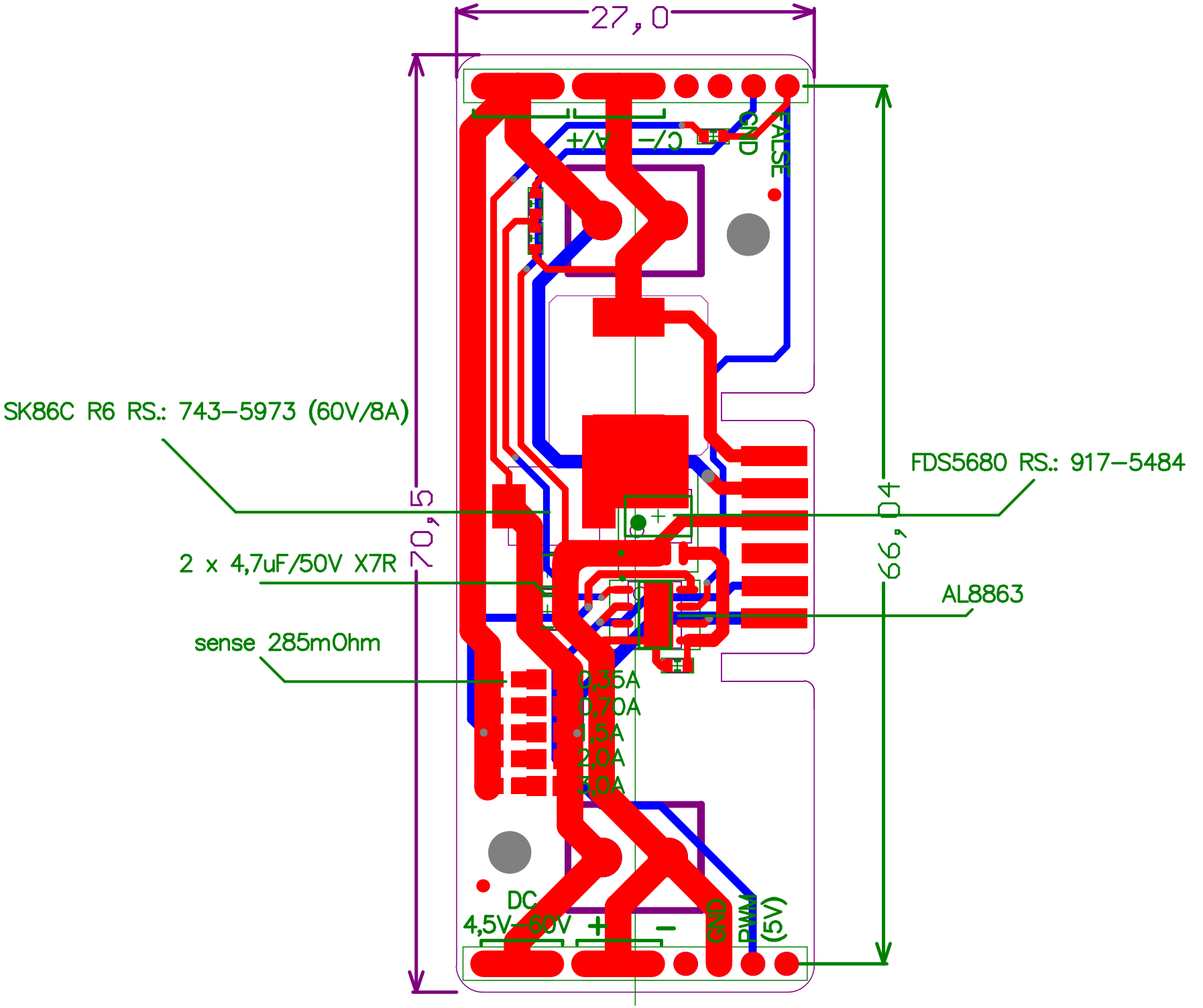
27,0
70,5
66,04
SK86C R6 RS.: 743-5973 (60V/8A)
FDS5680 RS.: 917-5484
2 x 4,7uF/50V X7R
AL8863
sense 285mOhm
0,35A
0,70A
1,5A
2,0A
3,0A
DC
4,5V-60V
+
-
GND
PWM
(5V)
C/-
A/+
GND
FALSE