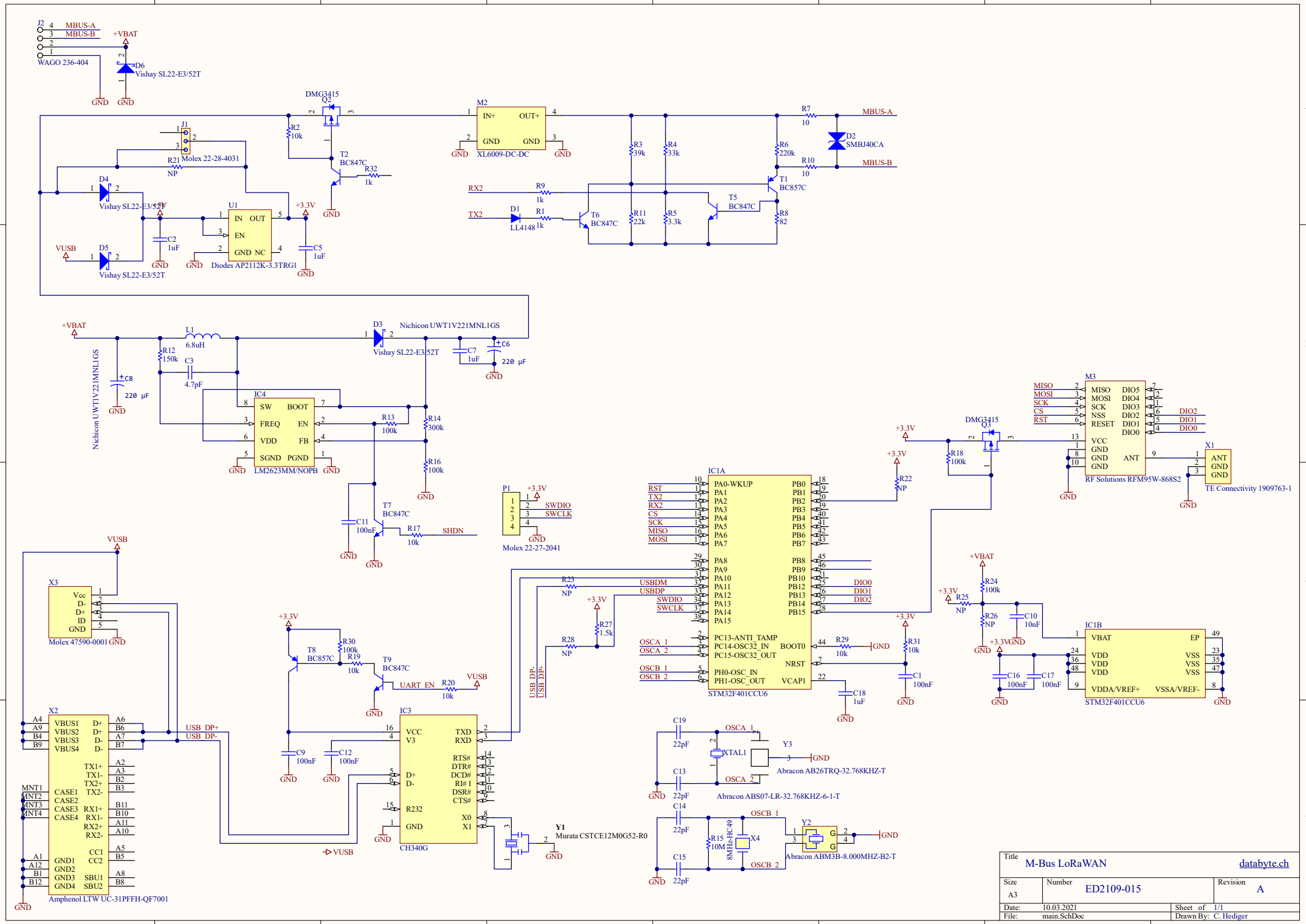
J2
MBUS-A
MBUS-B
WAGO 236-404
+VBAT
D6
Vishay SL22-E3/52T
GND
DMG3415
Q2
R2
10k
J1
Molex 22-28-4031
R21
NP
D4
Vishay SL22-E3/52T
+3.3V
U1
IN OUT
EN
GND NC
Diodes AP2112K-3.3TRG1
C2
1uF
C5
1uF
VUSB
D5
Vishay SL22-E3/52T
T2
BC847C
R32
1k
M2
IN+ OUT+
GND GND
XL6009-DC-DC
R3
39k
R4
33k
R7
10
MBUS-A
D2
SMBJ40CA
R10
10
MBUS-B
R6
220k
T1
BC857C
RX2
R9
1k
TX2
D1
LL4148
R1
1k
T6
BC847C
R11
22k
R5
3.3k
T5
BC847C
R8
82
+VBAT
L1
6.8uH
D3
Nichicon UWT1V221MNL1GS
Vishay SL22-E3/52T
C7
1uF
C6
220 µF
R12
150k
C3
4.7pF
C8
220 µF
IC4
SW BOOT
FREQ EN
VDD FB
SGND PGND
LM2623MM/NOPB
R13
100k
R14
300k
R16
100k
C11
100nF
T7
BC847C
R17
10k
SHDN
P1
SWDIO
SWCLK
Molex 22-27-2041
VUSB
X3
Vcc
D-
D+
ID
GND
Molex 47590-0001
X2
VBUS1 D+
VBUS2 D+
VBUS3 D-
VBUS4 D-
TX1+
TX1-
TX2+
TX2-
CASE1
CASE2
CASE3
CASE4
RX1+
RX1-
RX2+
RX2-
CC1
CC2
GND1
GND2
GND3
GND4
SBU1
SBU2
Amphenol LTW UC-31PFFH-QF7001
USB DP+
USB DP-
T8
BC857C
R30
100k
R19
10k
T9
BC847C
UART_EN
R20
10k
IC3
VCC
V3
TXD
RXD
RTS#
DTR#
DCD#
RI# I
DSR#
CTS#
D+
D-
R232
GND
X0
X1
CH340G
C9
100nF
C12
100nF
Y1
Murata CSTCE12M0G52-R0
IC1A
PA0-WKUP
PA1
PA2
PA3
PA4
PA5
PA6
PA7
PA8
PA9
PA10
PA11
PA12
PA13
PA14
PA15
PC13-ANTI_TAMP
PC14-OSC32_IN
PC15-OSC32_OUT
PH0-OSC_IN
PH1-OSC_OUT
PB0
PB1
PB2
PB3
PB4
PB5
PB6
PB7
PB8
PB9
PB10
PB12
PB13
PB14
PB15
BOOT0
NRST
VCAP1
STM32F401CCU6
RST
TX2
RX2
CS
SCK
MISO
MOSI
USBDM
USBDP
SWDIO
SWCLK
OSCA_1
OSCA_2
OSCB_1
OSCB_2
DIO0
DIO1
DIO2
R23
NP
R28
NP
R27
1.5k
R29
10k
R31
10k
C1
100nF
C18
1uF
R22
NP
R18
100k
DMG3415
Q3
M3
MISO
MOSI
SCK
NSS
RESET
VCC
GND
GND
GND
DIO5
DIO4
DIO3
DIO2
DIO1
DIO0
ANT
RF Solutions RFM95W-868S2
X1
ANT
GND
GND
TE Connectivity 1909763-1
R24
100k
R25
NP
R26
NP
C10
10nF
C16
100nF
C17
100nF
IC1B
VBAT
VDD
VDD
VDD
VDDA/VREF+
EP
VSS
VSS
VSS
VSSA/VREF-
STM32F401CCU6
C19
22pF
C13
22pF
XTAL1
Y3
Abracon AB26TRQ-32.768KHZ-T
Abracon ABS07-LR-32.768KHZ-6-1-T
C14
22pF
C15
22pF
R15
10M
8MHz-HC49
X4
Y2
Abracon ABM3B-8.000MHZ-B2-T
Title
M-Bus LoRaWAN
databyte.ch
Size
A3
Number
ED2109-015
Revision
A
Date:
10.03.2021
Sheet of
1/1
File:
main.SchDoc
Drawn By:
C. Hediger