MODEL M-12004NB/M-K12004NB/M-K12001NB

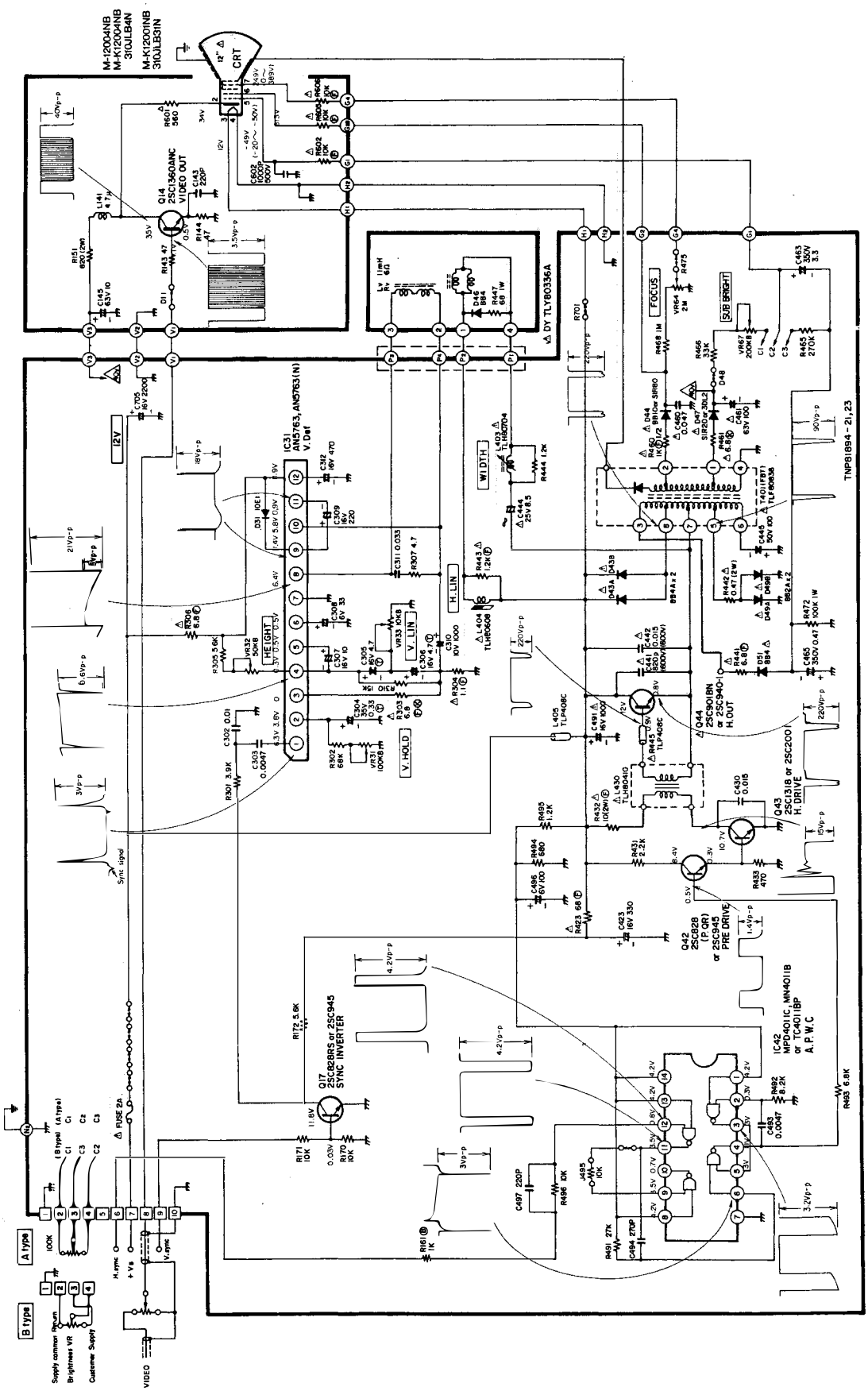

MODEL M-C12004N/M-C12009N/M-C12001N

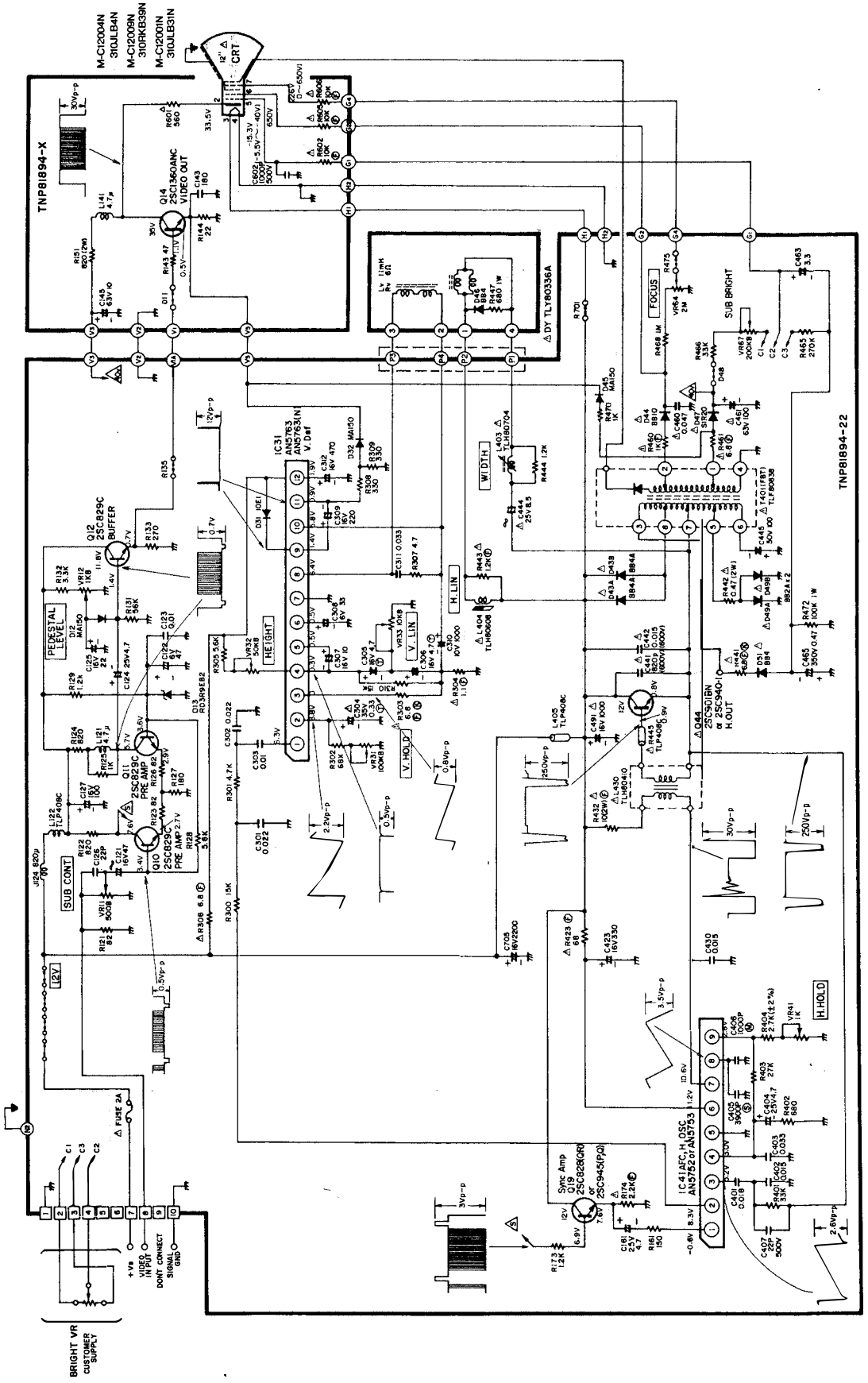
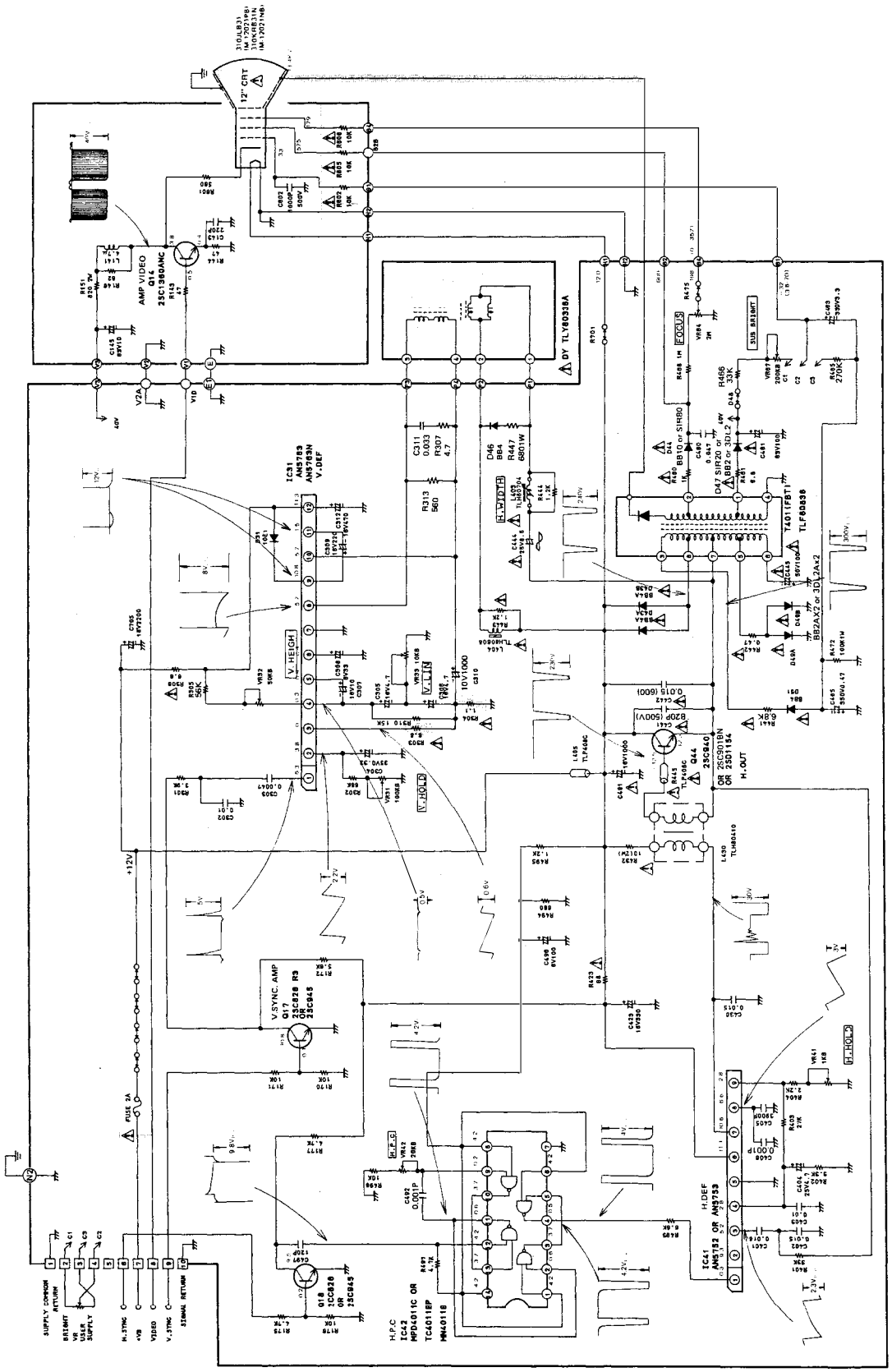
MODEL M-12021PB/M-12021NB