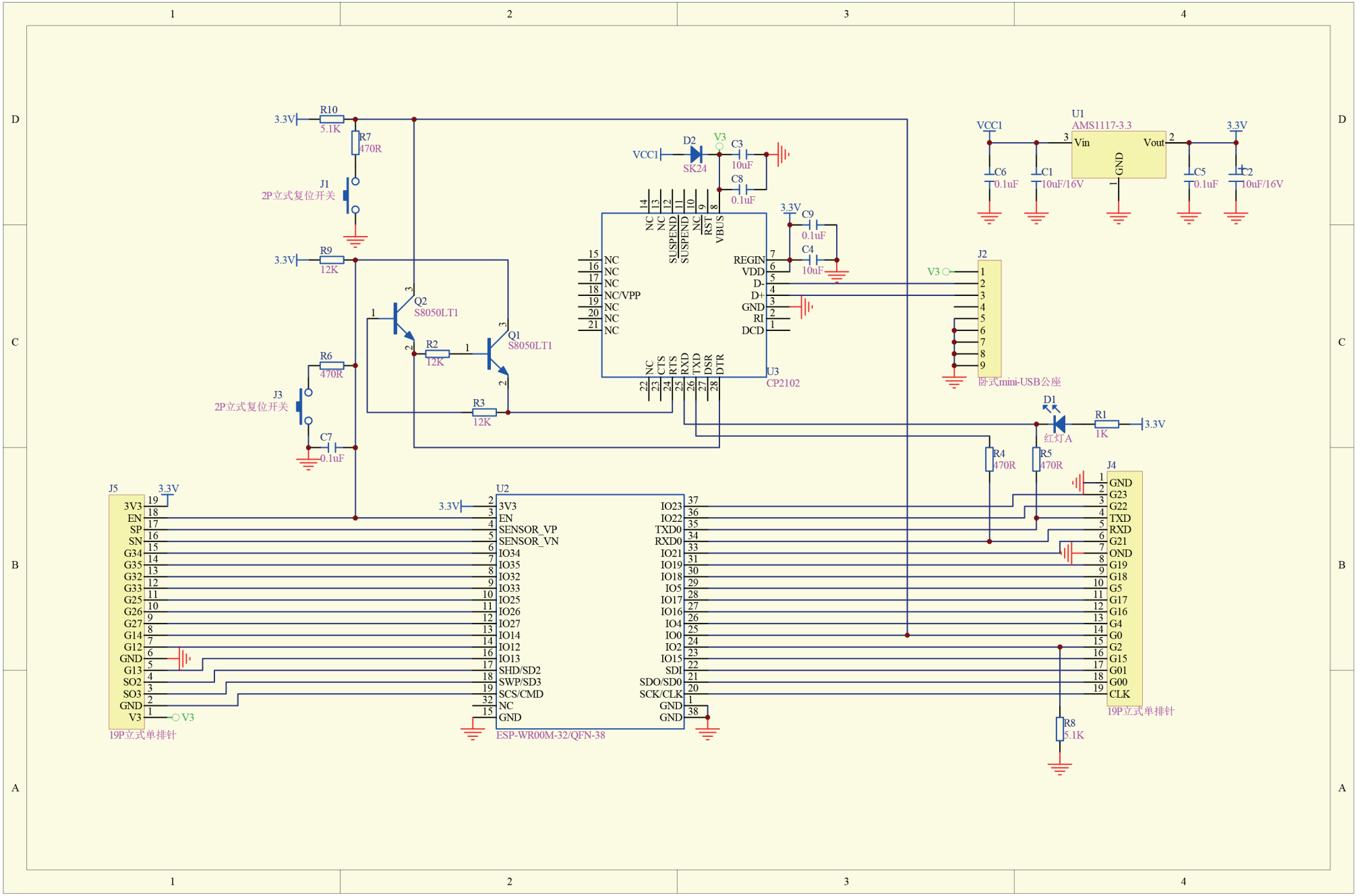ESP-32 NodeMCU Developmentboard Schematic