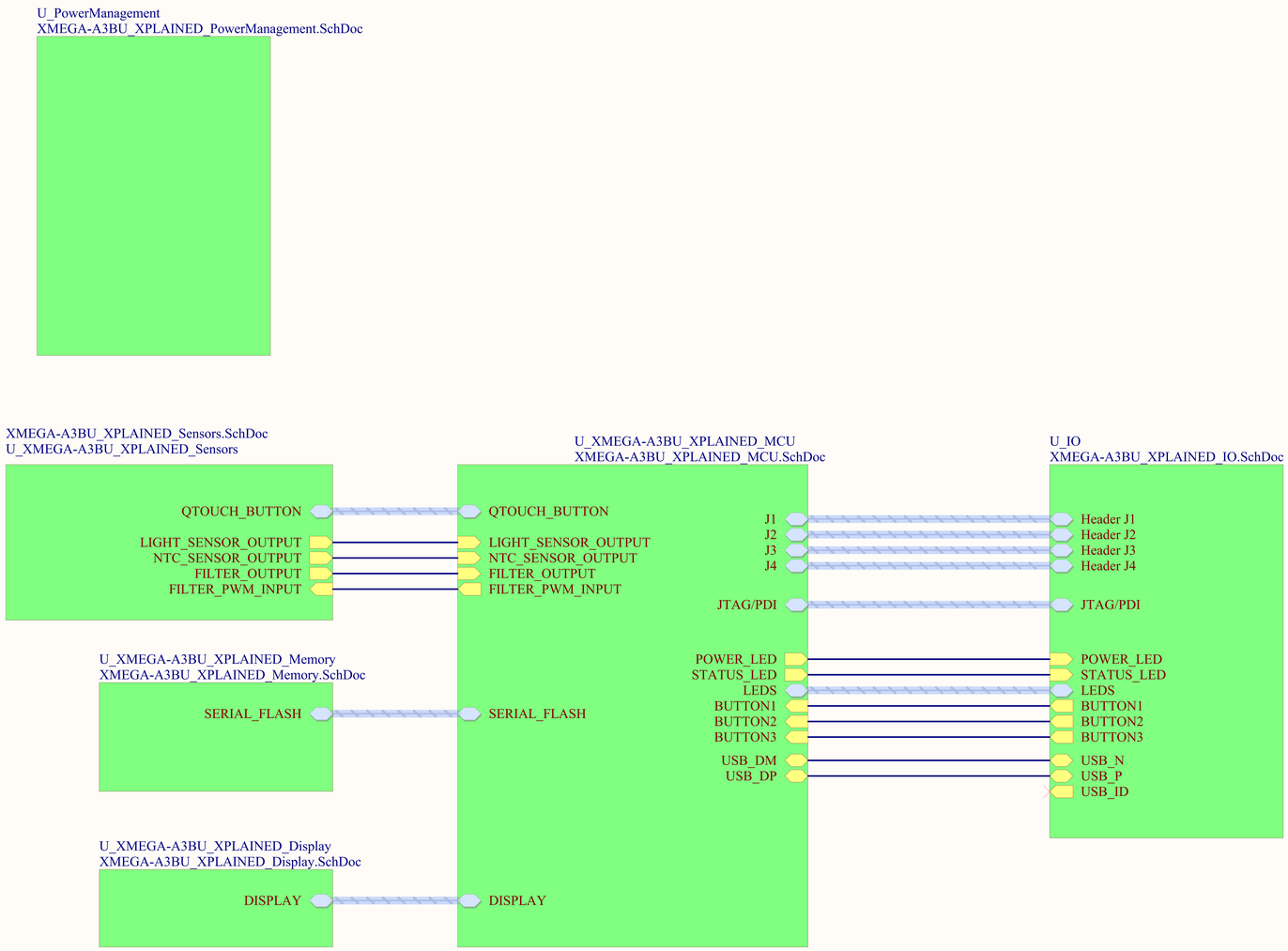

LABEL1

Product number/revision
Serial number

Label PCBA

PCB1

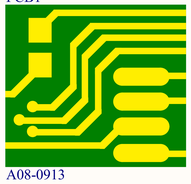

A08-0913

ATMEL Norway	*			
Vestre Rosten 79	*			
N-7075 TILLER	*			
NORWAY				
Date:	07.06.2011	15:02:08	PAGE: 1 of 7	
Document number:	1		Revision:	2
TITLE: Top Level Block Diagram				
XMEGA-A3BU_XPLAINED_TopLevel.SchDoc				

3.3V linear regulator with input range from - 4.4V - 18V

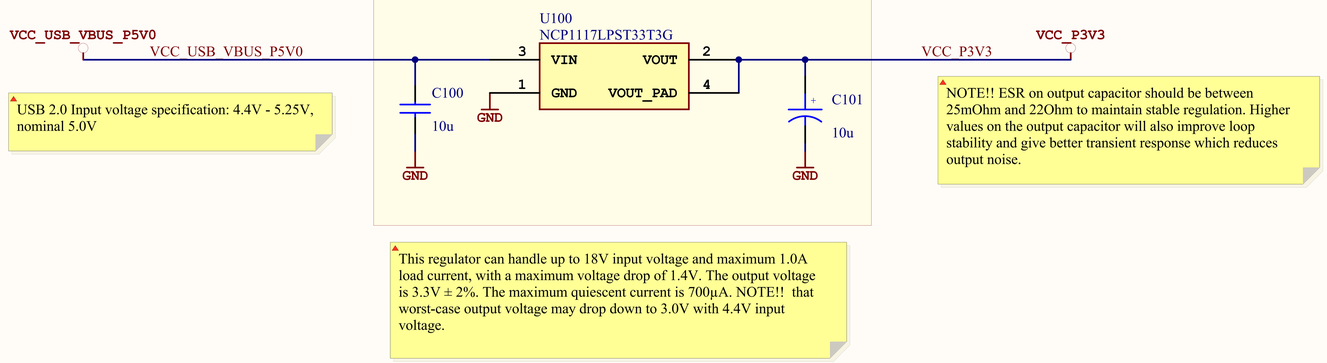

USB 2.0 Input voltage specification: 4.4V - 5.25V, nominal 5.0V

NOTE!! ESR on output capacitor should be between 25mOhm and 22Ohm to maintain stable regulation. Higher values on the output capacitor will also improve loop stability and give better transient response which reduces output noise.

This regulator can handle up to 18V input voltage and maximum 1.0A load current, with a maximum voltage drop of 1.4V. The output voltage is 3.3V ± 2%. The maximum quiescent current is 700µA. NOTE!! that worst-case output voltage may drop down to 3.0V with 4.4V input voltage.

CPU Power Supply Measurement Header

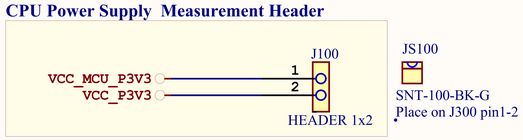

ATMEL Norway	*		
Vestre Rosten 79	*		
N-7075 TILLER	*		
NORWAY			
Date:	07.06.2011	15:02:08	PAGE: 2 of 7
Document number:	2		Revision: 2
TITLE: Power Supply			
XMEGA-A3BU_XPLAINED_PowerManagement.SchDoc			

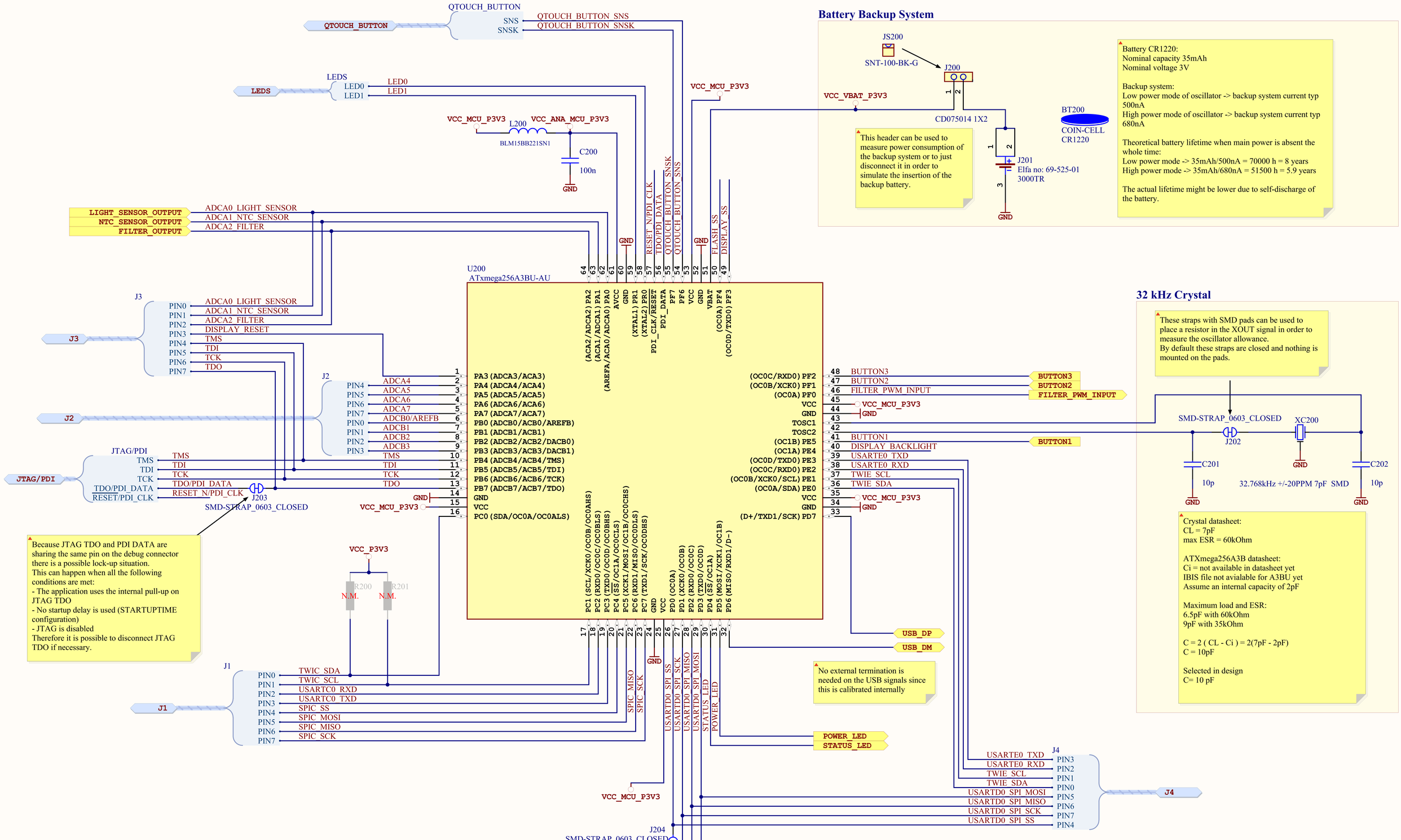

ATMEL Norway	*		
Vestre Rosten 79	*		
N-7075 TILLER	*		
NORWAY			
Date:	07.06.2011	15:02:08	PAGE: 3 of 7
Document number:	3		Revision: 2
TITLE: MCU ATxmega256A3BU			
XMEGA-A3BU_XPLAINED_MCU.SchDoc			

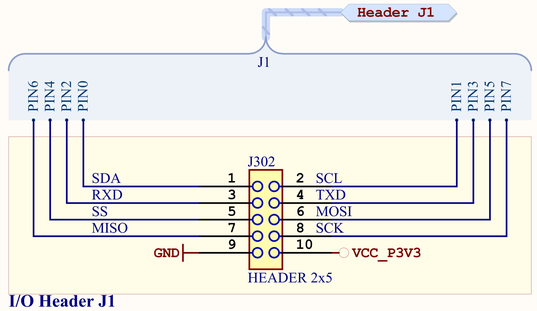

I/O Header J1

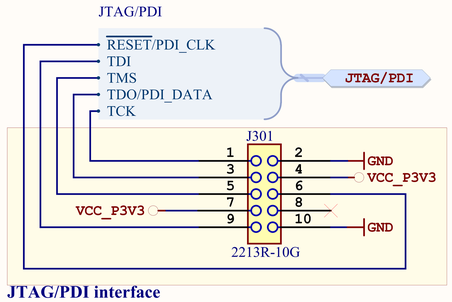

JTAG/PDI interface

USB Mini AB connector

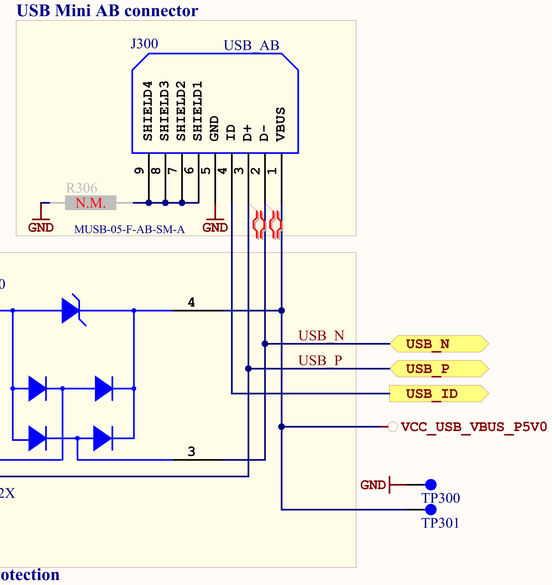

USB Transient protection

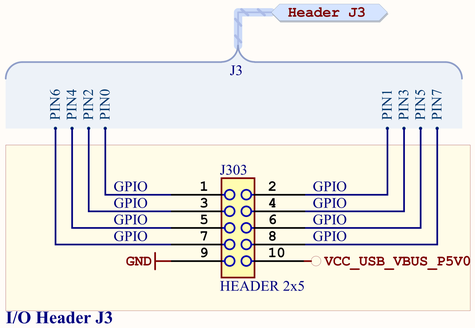

I/O Header J3

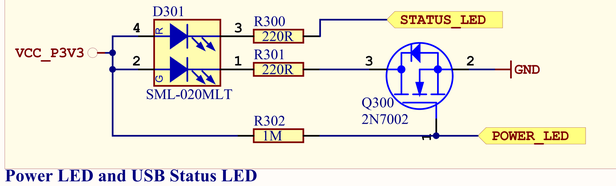

Power LED and USB Status LED

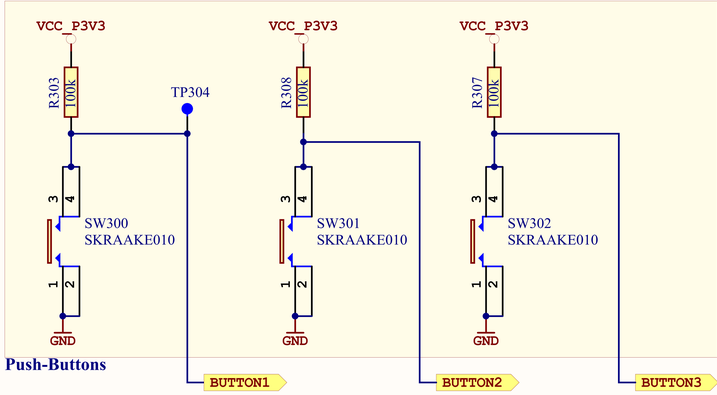

Push-Buttons

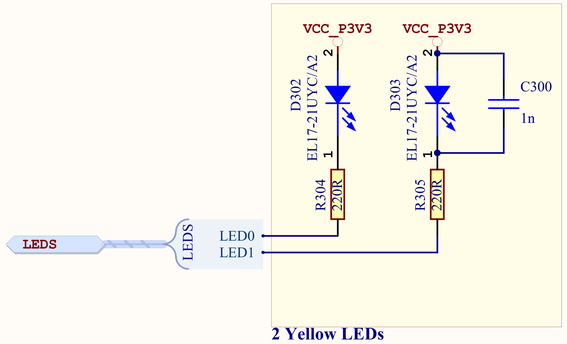

2 Yellow LEDs

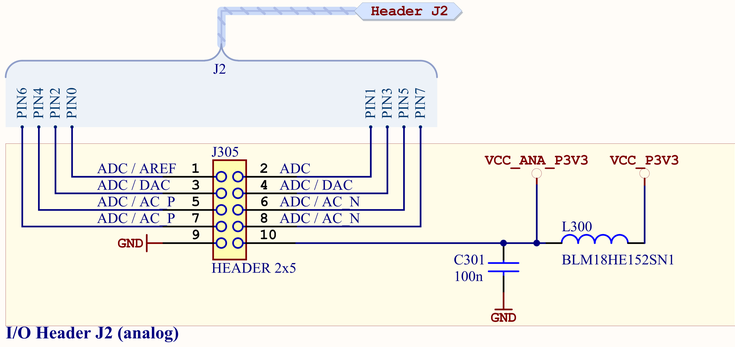

I/O Header J2 (analog)

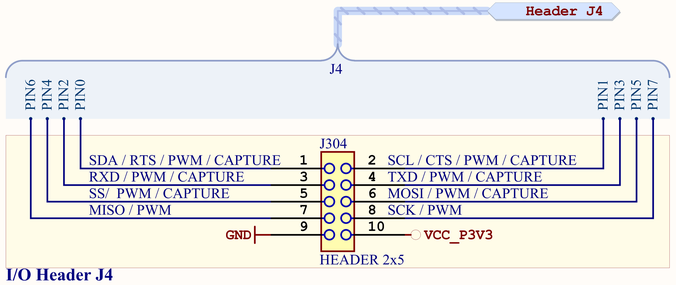

I/O Header J4

ATMEL Norway	*		
Vestre Rosten 79	*		
N-7075 TILLER	*		
NORWAY			
Date:	07.06.2011	15:02:08	PAGE: 4 of 7
Document number:	4		Revision: 2
TITLE: I/O			
XMEGA-A3BU_XPLAINED_IO.SchDoc			

NTC Temperature Sensor

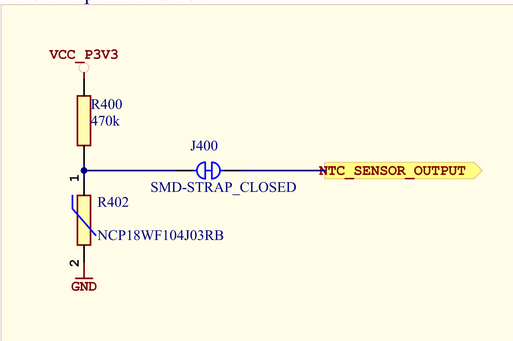

Light Sensor

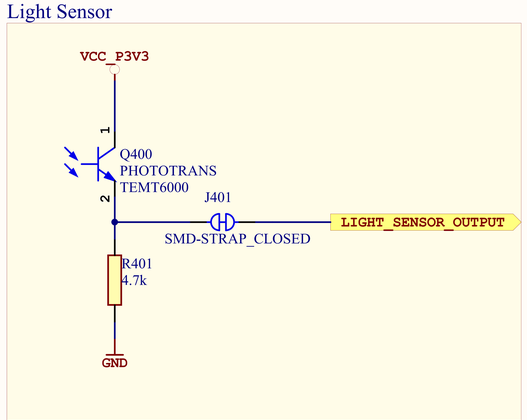

Lowpass RC Filter

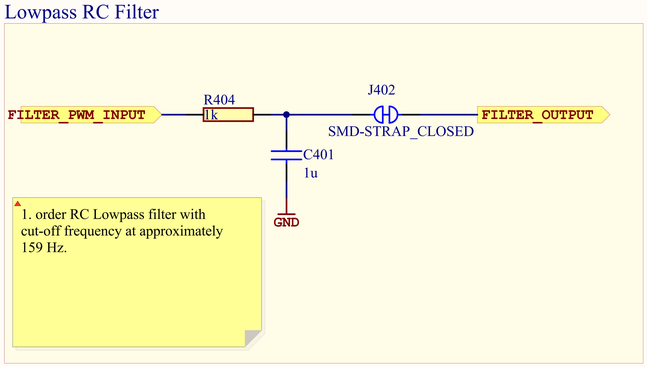

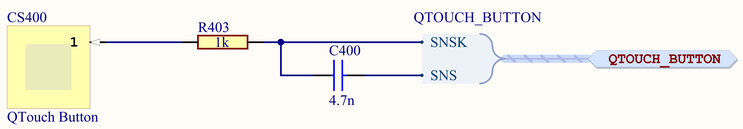

ATMEL Norway	*		
Vestre Rosten 79	*		
N-7075 TILLER	*		
NORWAY			
Date:	07.06.2011	15:02:08	PAGE: 5 of 7
Document number:	5		Revision: 2
TITLE: Sensors			
XMEGA-A3BU_XPLAINED_Sensors.SchDoc			

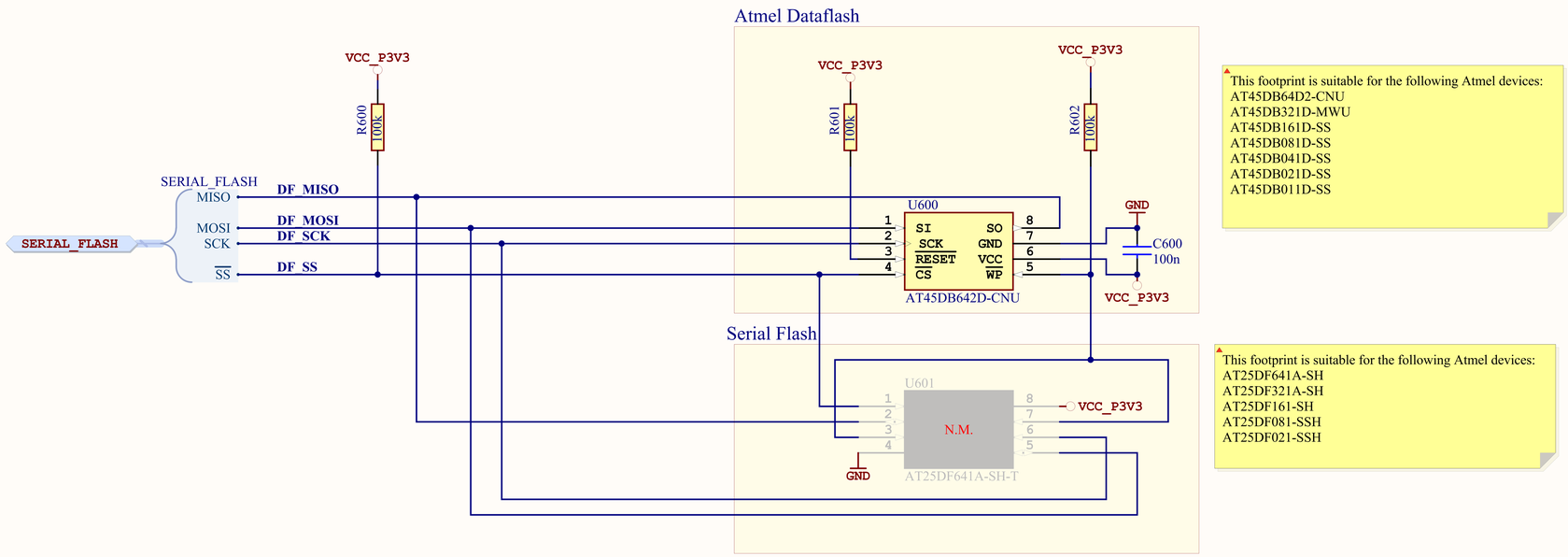

This footprint is suitable for the following Atmel devices:
AT45DB64D2-CNU
AT45DB321D-MWU
AT45DB161D-SS
AT45DB081D-SS
AT45DB041D-SS
AT45DB021D-SS
AT45DB011D-SS

This footprint is suitable for the following Atmel devices:
AT25DF641A-SH
AT25DF321A-SH
AT25DF161-SH
AT25DF081-SSH
AT25DF021-SSH

ATMEL Norway	*		
Vestre Rosten 79	*		
N-7075 TILLER	*		
NORWAY			
Date:	07.06.2011	15:02:09	PAGE: 6 of 7
Document number:	6		Revision: 2
TITLE: Memory			
XMEGA-A3BU_XPLAINED_Memory.SchDoc			

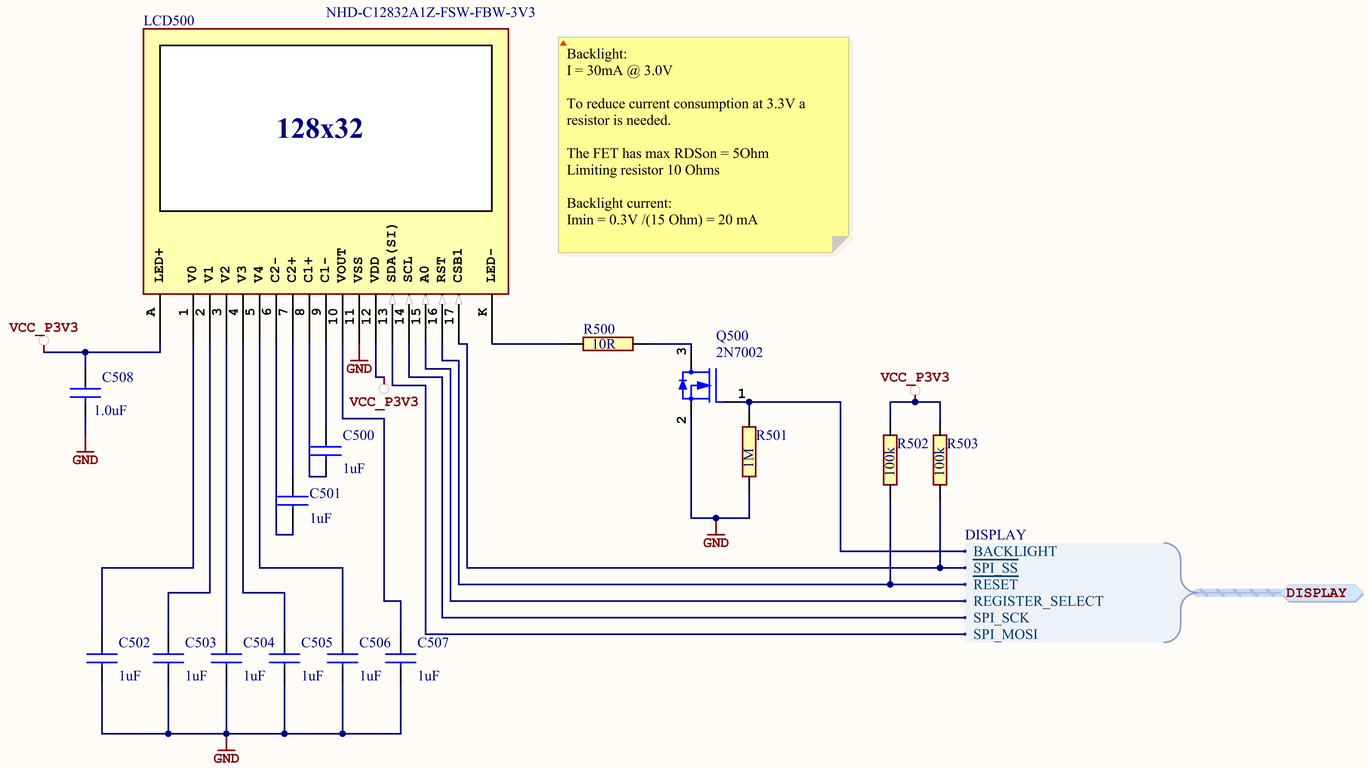

ATMEL Norway	*		
Vestre Rosten 79	*		
N-7075 TILLER	*		
NORWAY			
Date:	07.06.2011	15:02:09	PAGE: 7 of 7
Document number:	7		Revision: 2
TITLE: Display			
XMEGA-A3BU_XPLAINED_Display.SchDoc			

Mechanical Dimentions:

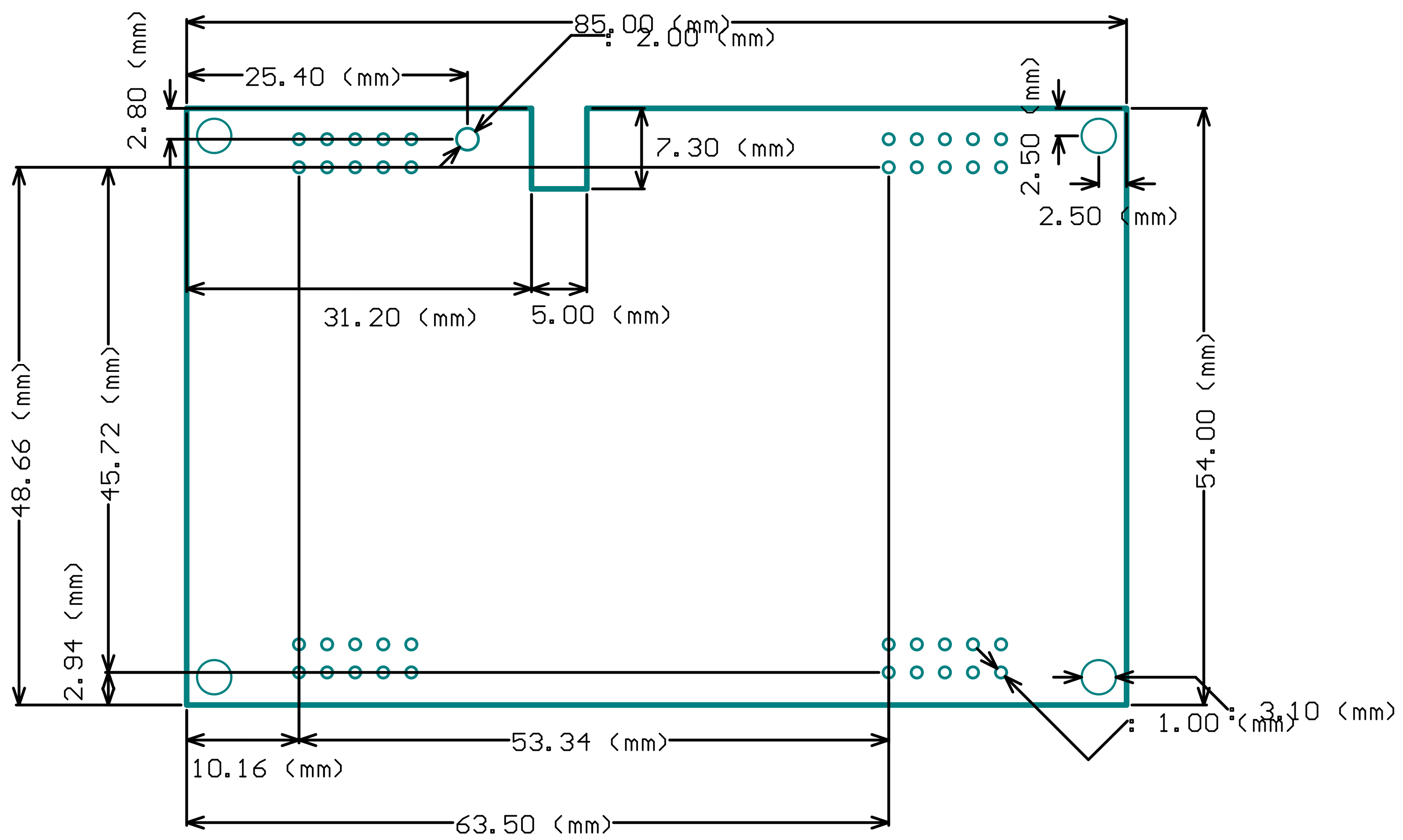

Connector Placement:

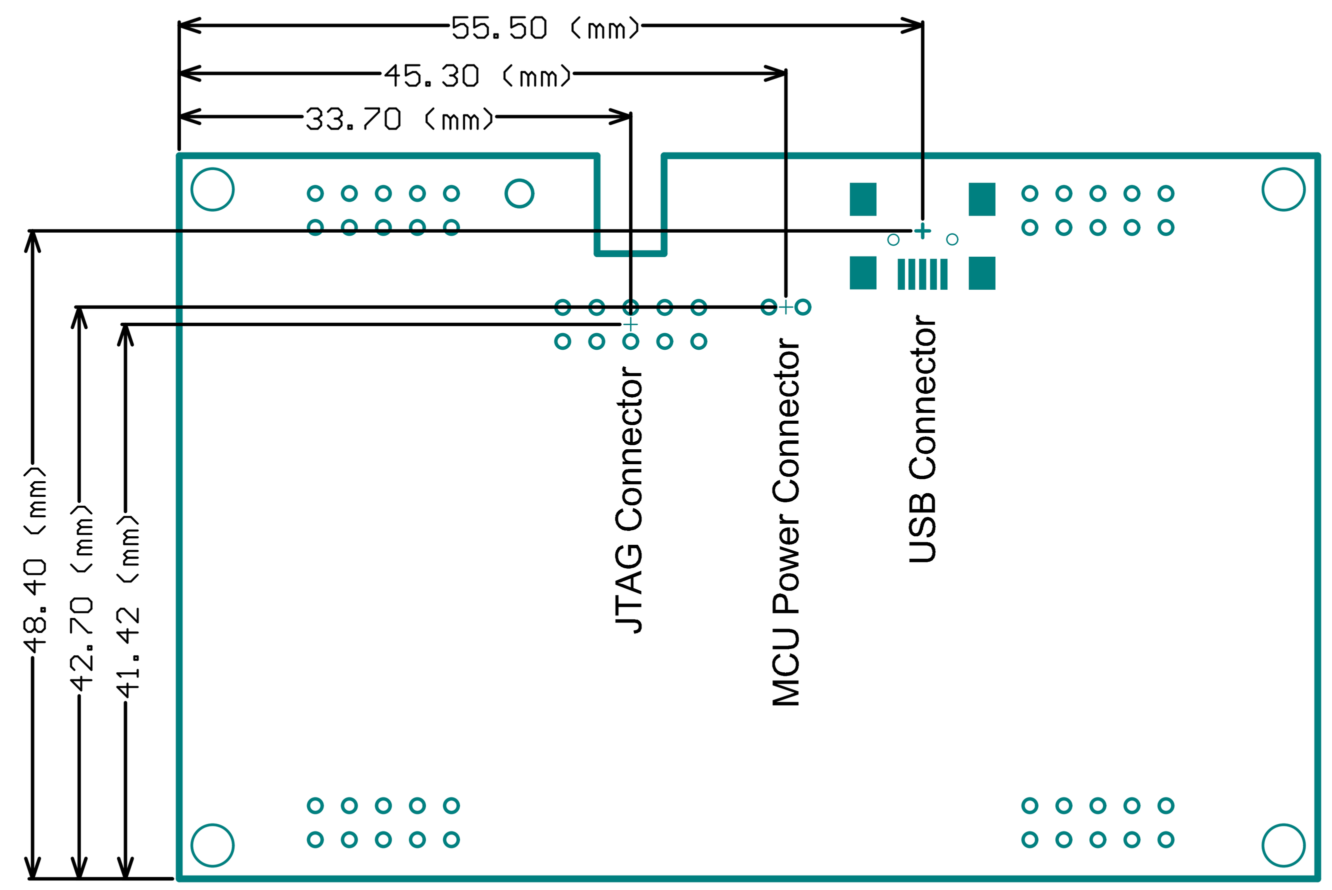

Testpoint Placement:

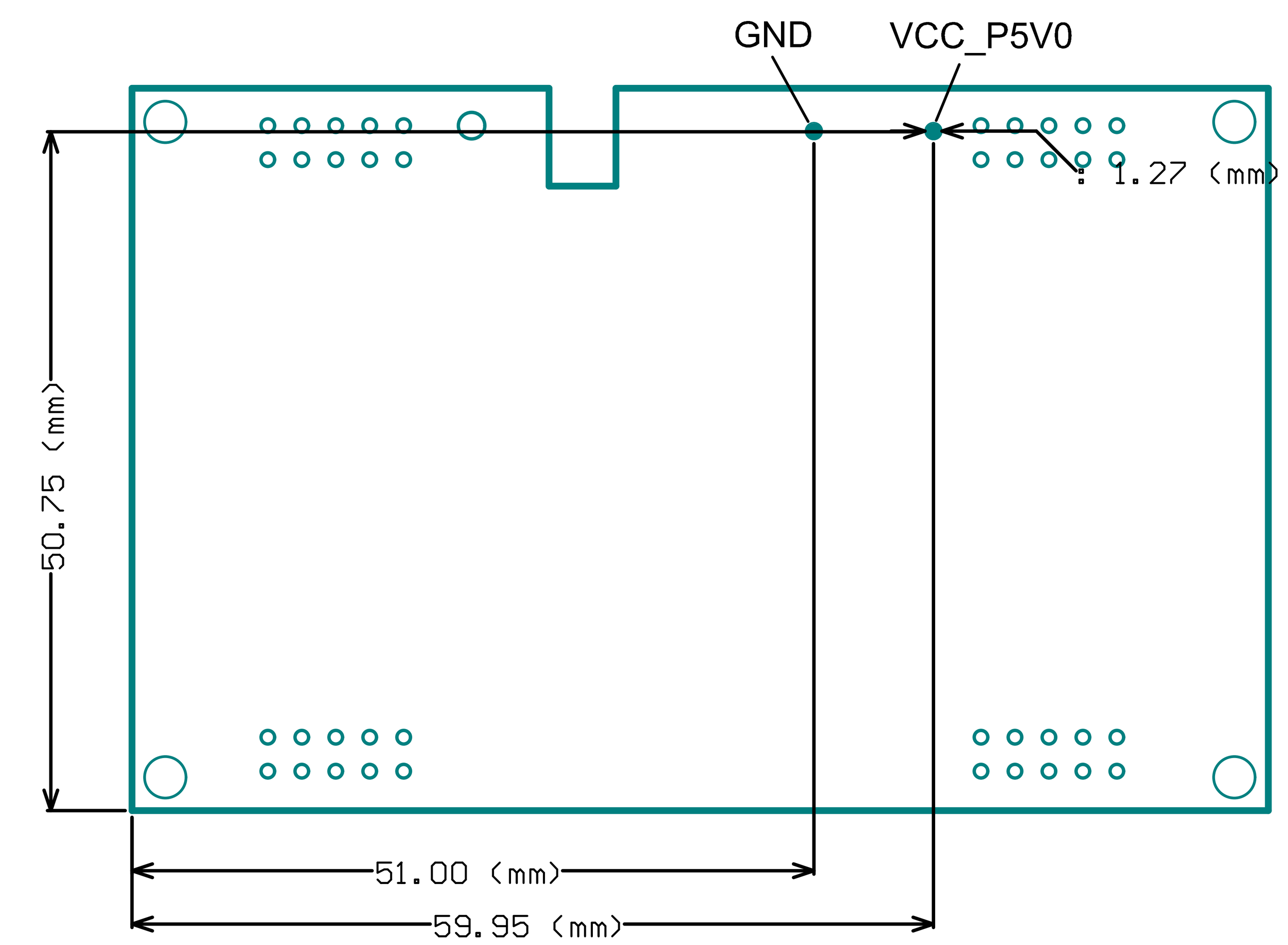

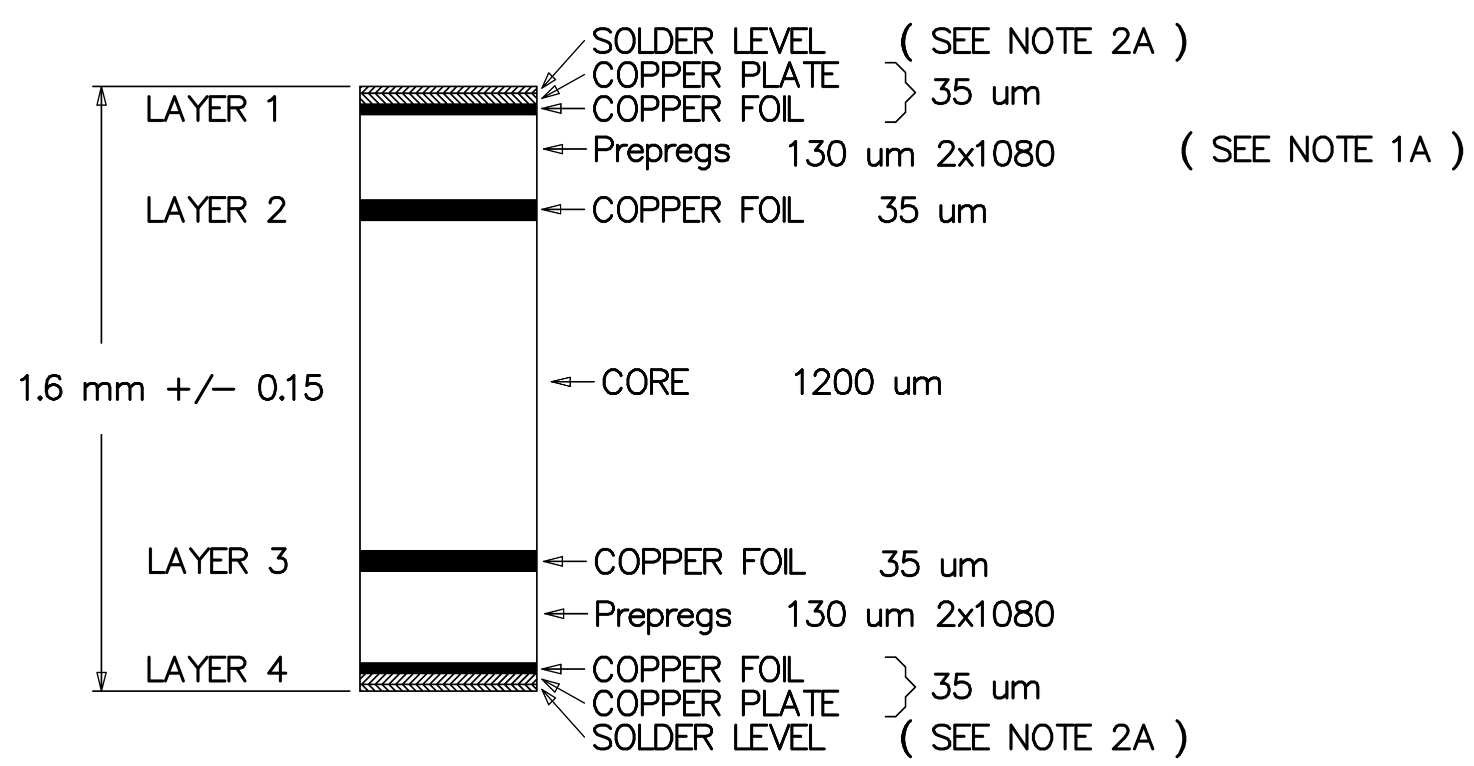

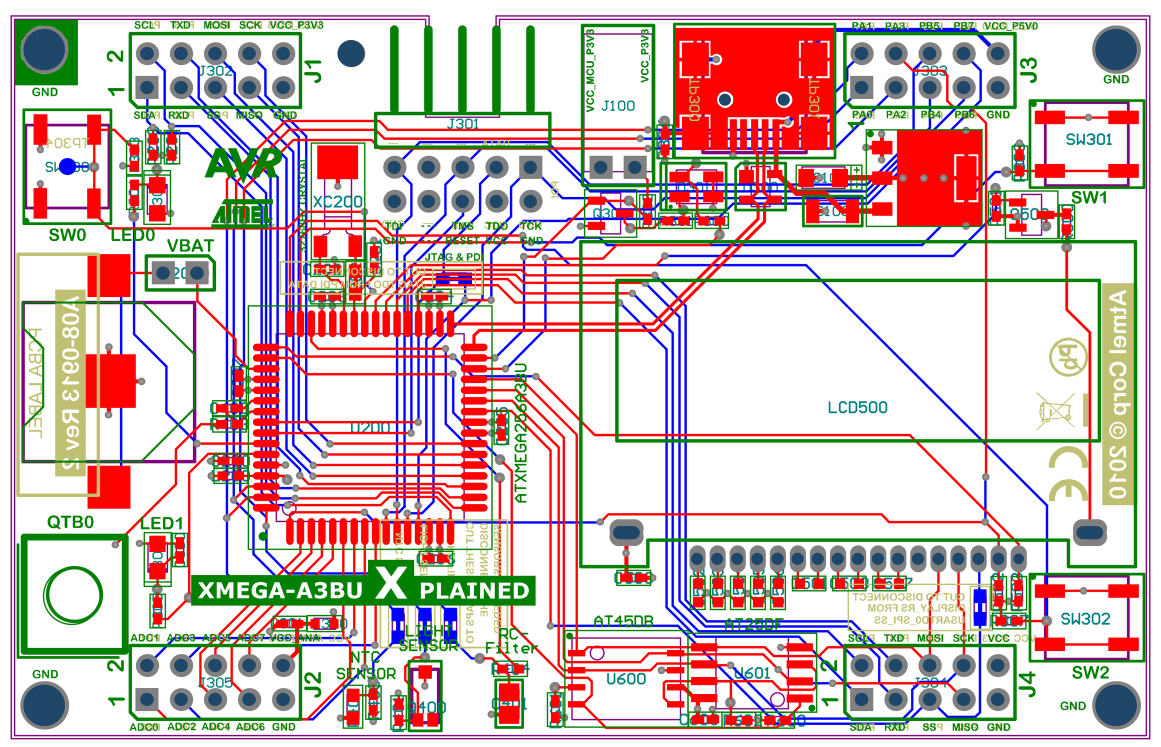

NOTE 1A: DIELECTRIC FR4
2A: SURFACE PROTECTION: Chemical Gold

THE BOARD MUST BE RoHS COMPLIANT

DETAIL A (CROSS–SECTION)

SCALE = NONE

L1 Mounting Pads / Low Freq. Signals
L2 Ground
L3 Power
L4 Low Freq. Signals

ATMEL NORWAY
Vestre Rosten 79
N–7075 Tiller

ENGINEER:
PCB DESIGNER:
TITLE:
DATE: 07.06.2011
PART NO.:
REV:
FILE NAME: XMEGA–A3BU_XPLAINED.PcbDoc
DWG NO:
SCALE:

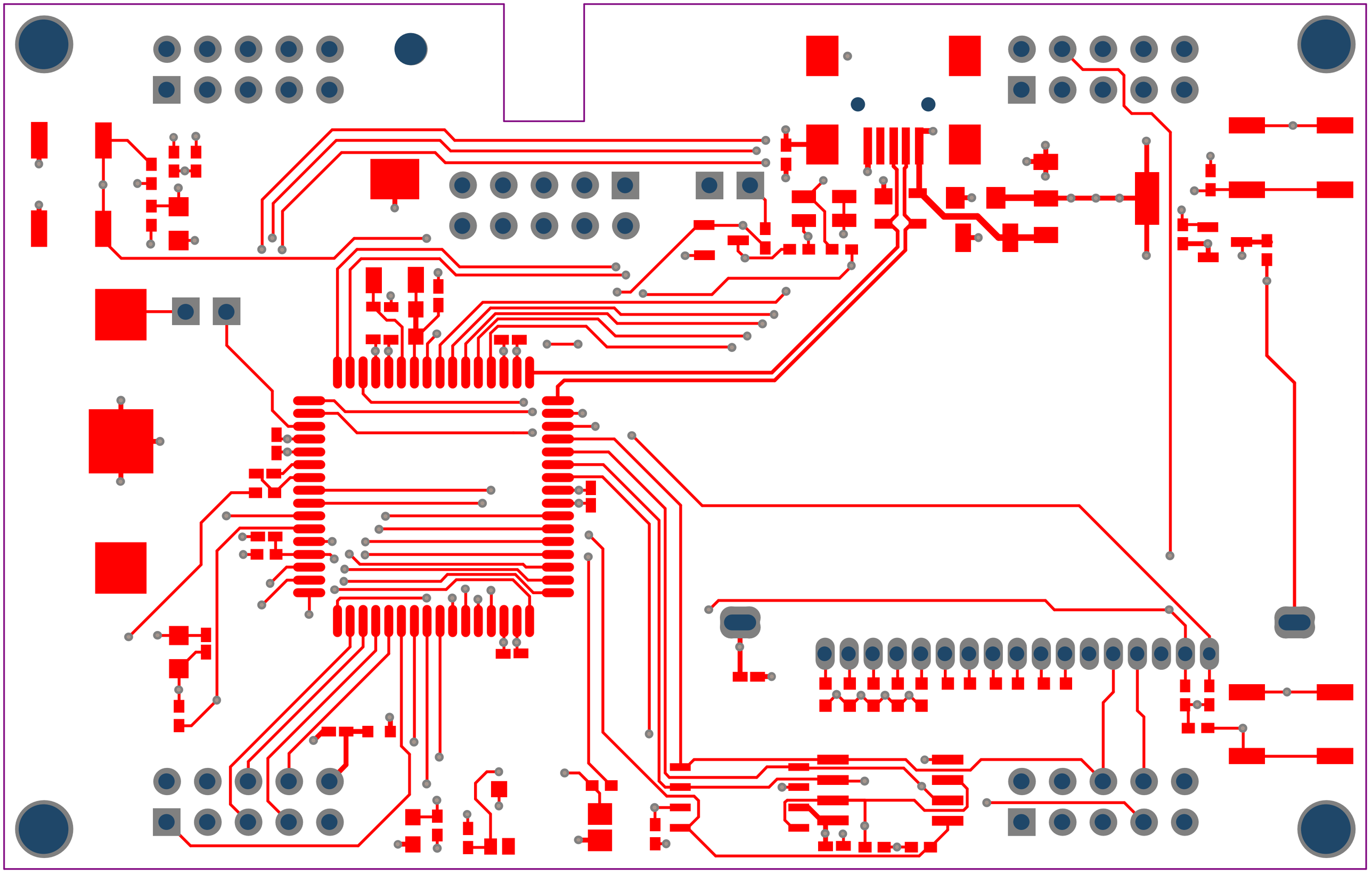

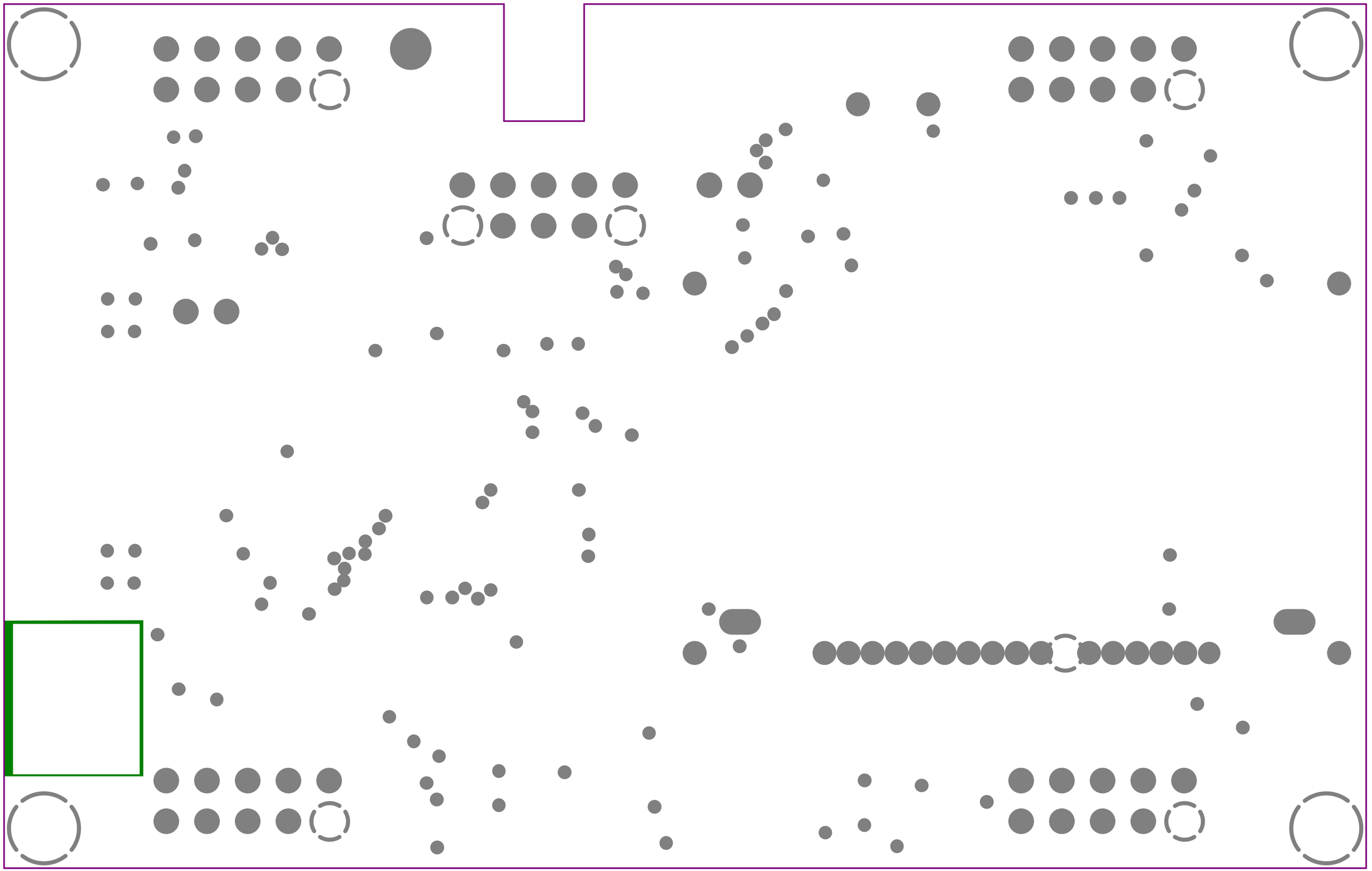

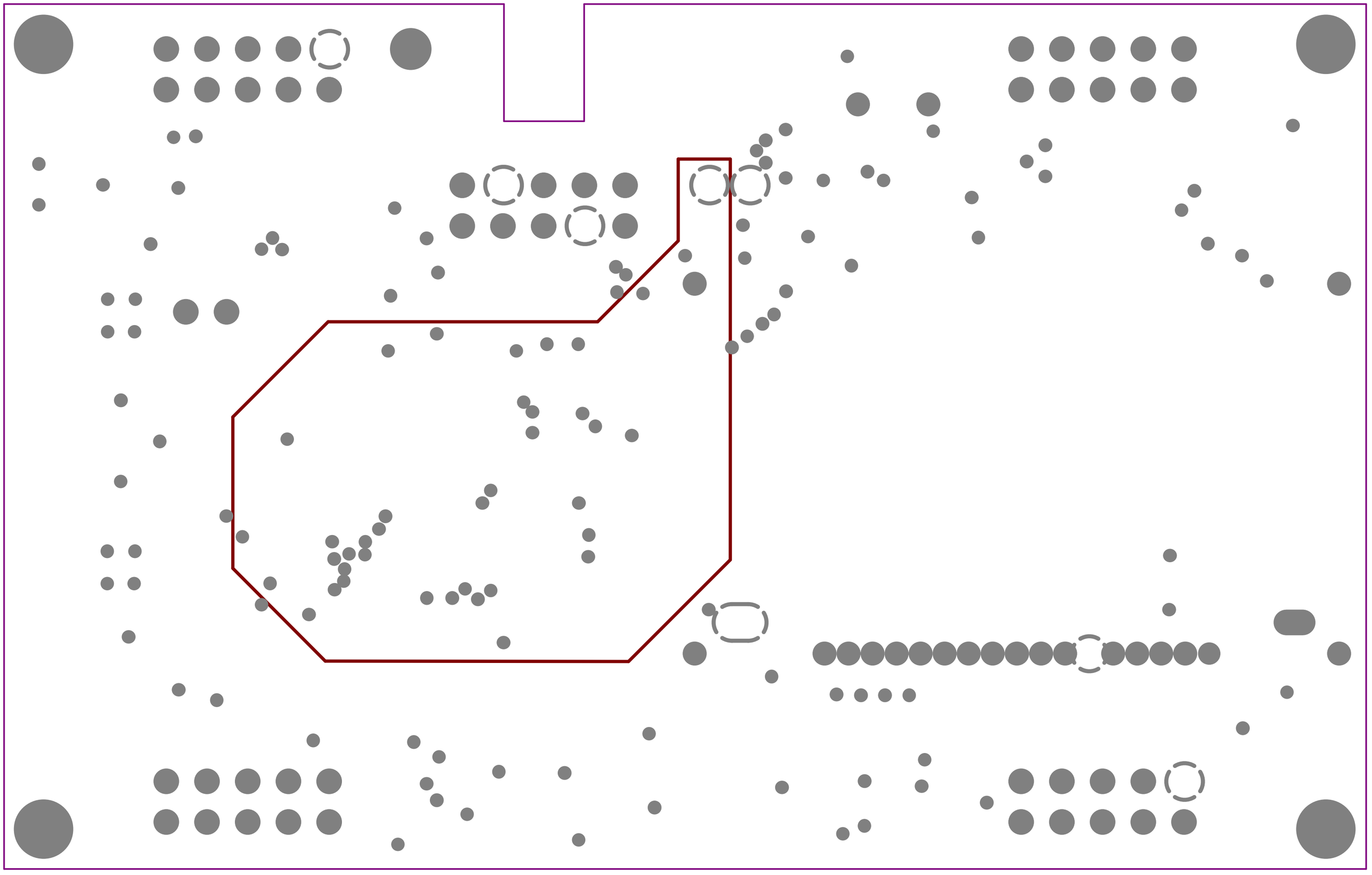

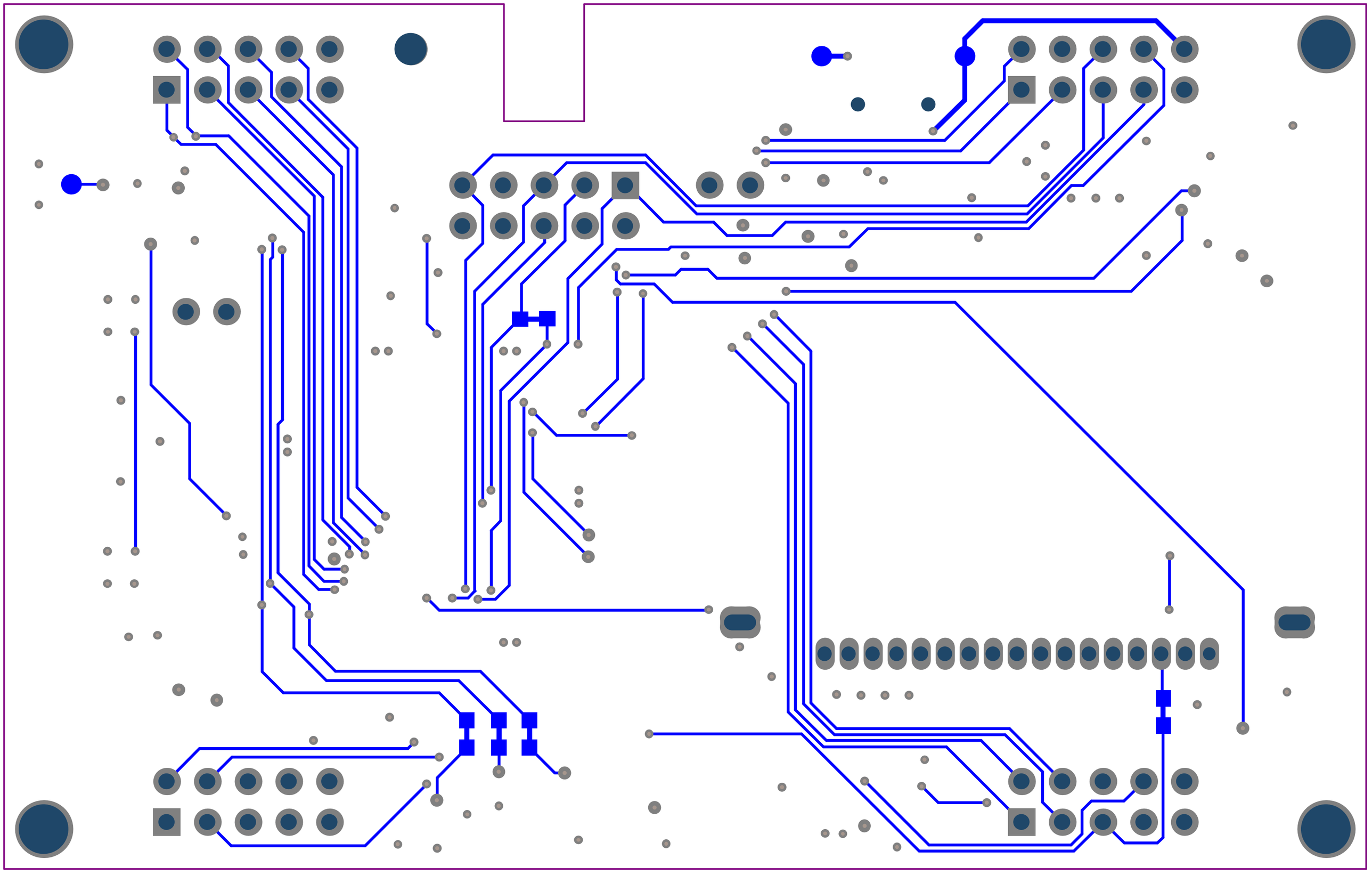

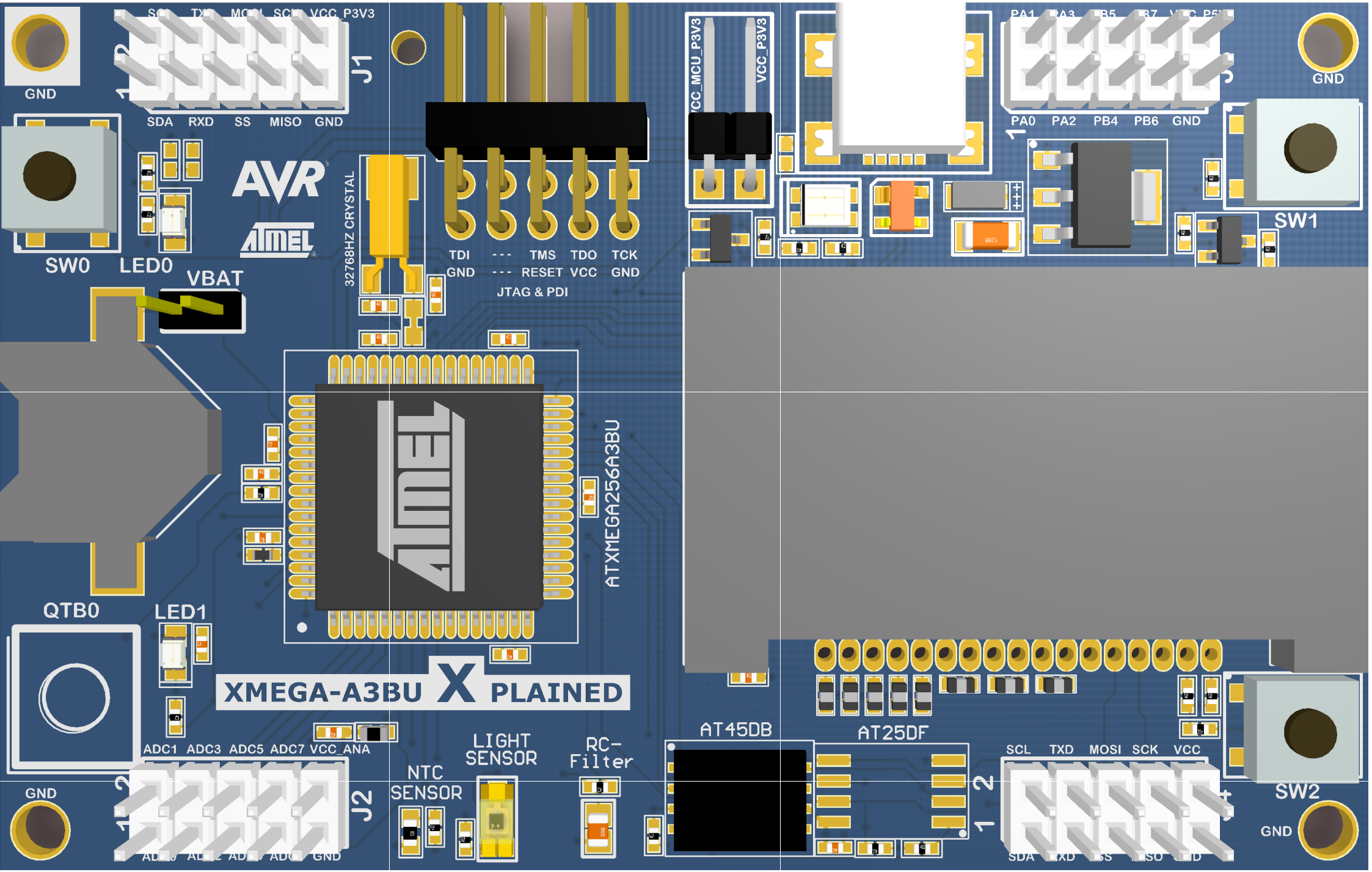
GND
SCL TXD MOSI SCK VCC_P3V3
J1
SDA RXD SS MISO GND
SW0
LED0
VBAT
AVR
ATMEL
32768HZ CRYSTAL
TDI --- TMS TDO TCK
GND --- RESET VCC GND
JTAG & PDI
VCC_MCU_P3V3
VCC_P3V3
PA1 PA3 PB5 PB7 VCC_P5V
PA0 PA2 PB4 PB6 GND
GND
SW1
ATXMEGA256A3BU
QTB0
LED1
XMEGA-A3BU X PLAINED
ADC1 ADC3 ADC5 ADC7 VCC_ANA
J2
GND
NTC SENSOR
LIGHT SENSOR
RC-Filter
AT45DB
AT25DF
SCL TXD MOSI SCK VCC
SDA RXD SS MISO GND
SW2
GND

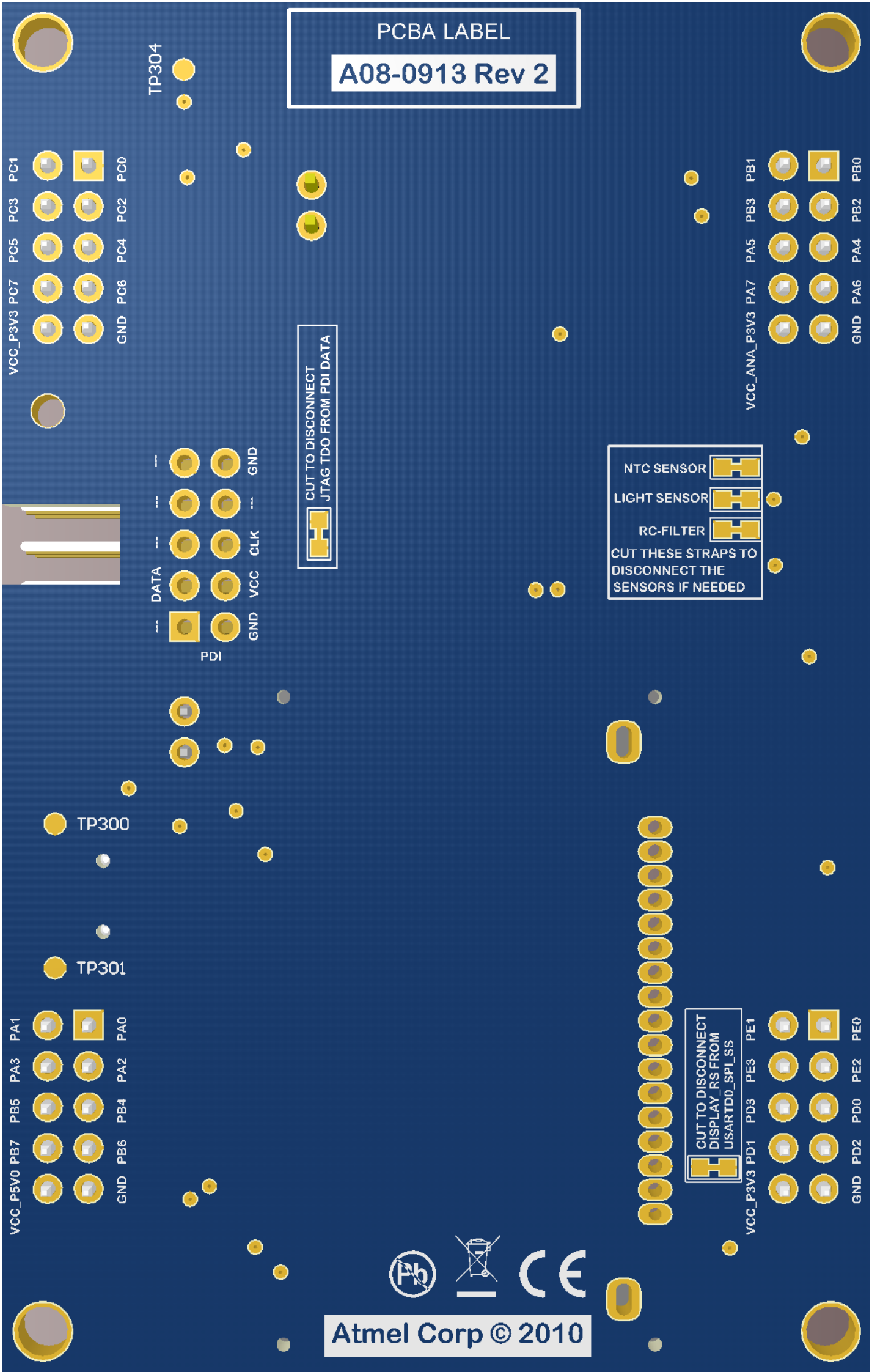
PCBA LABEL
A08-0913 Rev 2
TP304
PC1
PC0
PC3
PC2
PC5
PC4
PC7
PC6
VCC_P3V3
GND
CUT TO DISCONNECT
JTAG TDO FROM PDI DATA
PB1
PB0
PB3
PB2
PA5
PA4
PA7
PA6
VCC_ANA_P3V3
GND
NTC SENSOR
LIGHT SENSOR
RC-FILTER
CUT THESE STRAPS TO
DISCONNECT THE
SENSORS IF NEEDED
GND
CLK
VCC
DATA
GND
PDI
TP300
TP301
PA1
PA0
PA3
PA2
PB5
PB4
PB7
PB6
VCC_P5V0
GND
CUT TO DISCONNECT
DISPLAY_RS FROM
USARTD0_SPI_SS
PE1
PE3
PD3
PD1
VCC_P3V3
PE0
PE2
PD0
PD2
GND
Atmel Corp © 2010

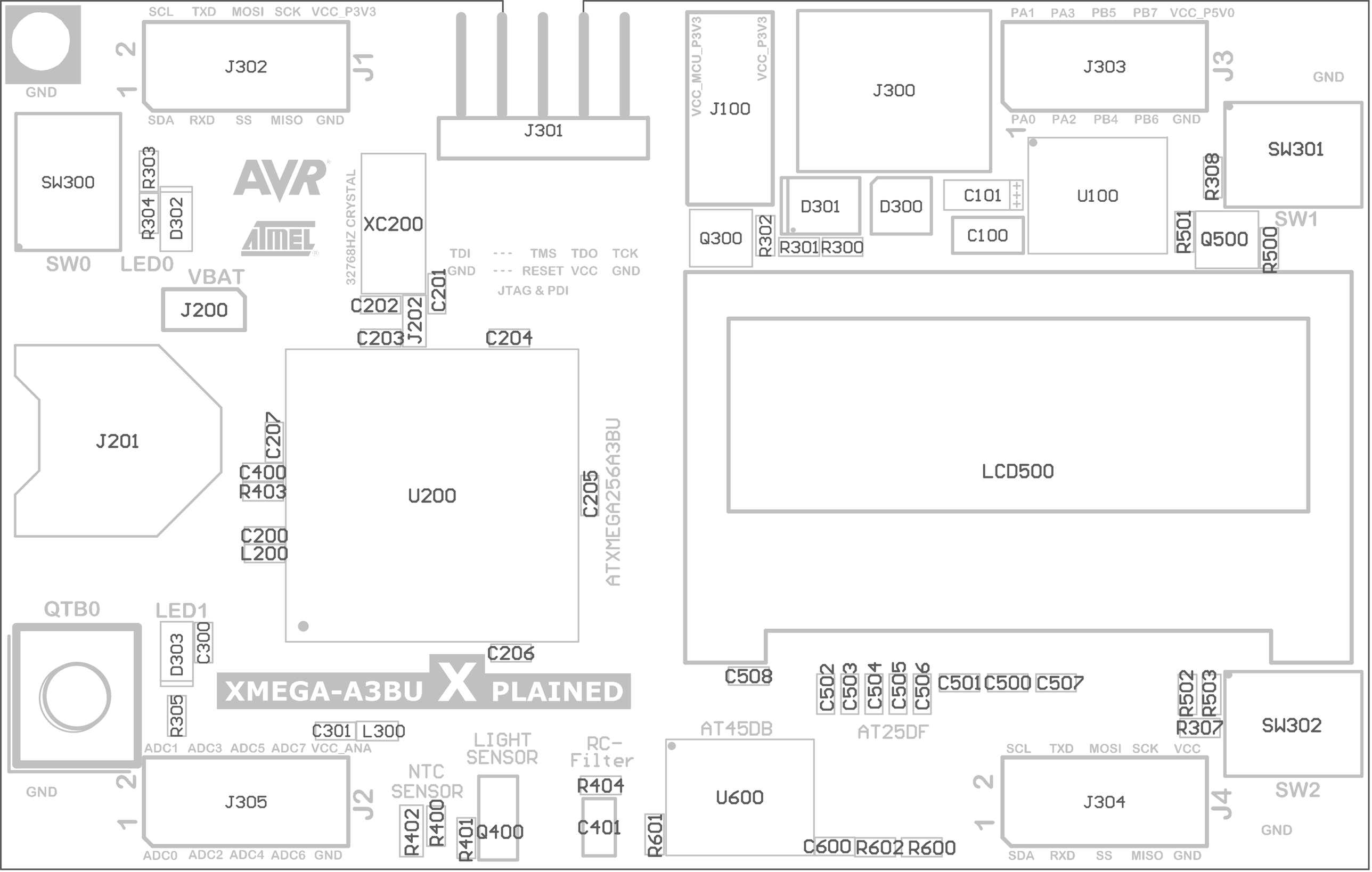
SCL TXD MOSI SCK VCC_P3V3
J302
J1
SDA RXD SS MISO GND
GND
J301
VCC_MCU_P3V3
VCC_P3V3
J100
J300
PA1 PA3 PB5 PB7 VCC_P5V0
J303
J3
PA0 PA2 PB4 PB6 GND
GND
SW300
R303
R304
D302
SW0
LED0
AVR
ATMEL
32768HZ CRYSTAL
XC200
TDI --- TMS TDO TCK
GND --- RESET VCC GND
JTAG & PDI
VBAT
J200
C202
J202
C201
C203
C204
D301
D300
C101
C100
U100
Q300
R302
R301
R300
R308
SW301
SW1
R501
Q500
R500
J201
C207
C400
R403
U200
C205
ATXMEGA256A3BU
C200
L200
LCD500
QTB0
LED1
D303
C300
C206
XMEGA-A3BU X PLAINED
C508
C502
C503
C504
C505
C506
C501
C500
C507
AT25DF
R502
R503
R307
SW302
R305
C301
L300
ADC1 ADC3 ADC5 ADC7 VCC_ANA
LIGHT SENSOR
RC-Filter
AT45DB
SCL TXD MOSI SCK VCC
GND
J305
J2
NTC SENSOR
R402
R400
R401
Q400
R404
C401
R601
U600
C600
R602
R600
J304
J4
SW2
GND
ADC0 ADC2 ADC4 ADC6 GND
SDA RXD SS MISO GND

VCC_P5V0 PB7 PB5 PA3 PA1

GND PB6 PB4 PA2 PA0

TP301

TP300

VCC_P3V3 PC7 PC5 PC3 PC1

GND PC6 PC4 PC2 PC0

TP304

--- DATA --- --- ---

PDI

GND VCC CLK --- GND

J203 CUT TO DISCONNECT JTAG TDO FROM PDI DATA

PCBA LABEL

A08-0913 Rev 2

NTC SENSOR J400

LIGHT SENSOR J401

RC-FILTER J402

CUT THESE STRAPS TO DISCONNECT THE SENSORS IF NEEDED

J204 CUT TO DISCONNECT DISPLAY_RS FROM USARTD0_SPI_SS

VCC_P3V3 PD1 PD3 PE3 PE1

GND PD2 PD0 PE2 PE0

VCC_ANA_P3V3 PA7 PA5 PB3 PB1

GND PA6 PA4 PB2 PB0

Atmel Corp © 2010

Component list

Top Level Block Diagram

Source Data From: XMEGA-A3BU_XPLAINED.PrjPcb
Project: XMEGA-A3BU_XPLAINED.PrjPcb
Variant: default_variant

Report Date: 07.06.2011 15:02:31
Print Date: 07.06.2011 15:02:29

#	Designator	Quantity	Value	Manufacturer	MPN	Description
1	BT200	1	CR1220	Panasonic	CR1220	CR1220 Lithium coin-cell battery
2	C100	1	10u	Murata	GRM31CR71C106KA12L	Ceramic capacitor, SMD 1206, X7R, 16V, ±10 %
3	C101	1	10u	Kemet	T494A106K016AT	SMD tantalum capacitor, ESR = 3 Ohm, 3216-18 (EIA) 1206
4	C200, C203, C204, C205, C206, C207, C301, C600	8	100n	Kemet	C0402C104K4RACTU	Ceramic capacitor, SMD 0402, X7R, 16V, +/-10%
5	C201, C202	2	10p			Ceramic capacitor, SMD 0402, NP0, 50V, +/-5%
6	C300	1	1n			Ceramic capacitor, SMD 0402, X7R, 50V, +/-10%
7	C400	1	4.7n			Ceramic capacitor, SMD 0402, X7R, 25V, +/-10%
8	C401	1	1u			Ceramic capacitor, SMD 0805, X7R, 16V, ±10 %
9	C500, C501, C502, C503, C504, C505, C506, C507	8	1uF	Murata	GRM188R61C105KA12D	Ceramic capacitor, SMD 0603, X5R, 16V, 10% (de19763)
10	C508	1	1.0uF	Murata	GRM155R60J105KE19D	Ceramic capacitor, SMD0402, X5R, 6.3V, 10%
11	D300	1	PRTR5V0U2X	Philips	PRTR5V0U2X	Double rail-to-rail USB ESD protection diode
12	D301	1	SML-020MLT	ROHM	SML-020MLT	LED, 2 colour (RED/GREEN), transparent clear lens, SMD
13	D302, D303	2	EL17-21UYC/A2	Everlight	EL17-21UYC/A2	LED, Yellow, Wave length=591nm, SMD 0805, ±70°
14	J100	1	Pin header 1x2 right angle	Pro-data International Corp	2213R-2G	1x2 pin header, right angle, 2.54 mm pitch, through-hole
15	J200	1	CD075014 1X2	Freber	CD075014 1X2	1x2 pin header, 2.54 mm pitch, Pin-in-Paste THM
16	J201	1	3000TR	Keystone Corp.	3000TR	CR1220 Li-Ion coin-cell battery clip, SMD
17	J300	1	MUSB-05-F-AB-SM-A	SAMTEC	MUSB-05-F-AB-SM-A	USB Mini-AB Connector, SMD
18	J301	1	2213R-10G	Multicomp	2213R-10G	Header, 2 Row, R/Angle, 10 Way
19	J302, J303, J304, J305	4	CD075014 2X5	Freber	CD075014 2X5	2x5 pin header, 2.54 mm pitch, Pin-in-Paste THM
20	JS100, JS200	2	SNT-100-BK-G	SAMTEC	SNT-100-BK-G	Jumper cap for 2.54mm pinheader
21	L200	1	BLM15BB221SN1	Murata	BLM15BB221SN1	SMD RF inductor 0402. Z=220Ohm (@100MHz), Max R(dc)=0.80Ohm, Max current=200mA
22	L300	1	BLM18HE152SN1	Murata	BLM18HE152SN1	SMD RF inductor 0603. Z=1500Ohm (@100MHz), Max R(dc)=0.50Ohm, Max current=500mA
23	LABEL1	1	Label PCBA	ACT Logimark AS	505462	PCBA identification label PP Top White Gloss
24	LCD500	1	NHD-C12832A1Z-FSW-FBW 3V3	NEWHAVEN display	NHD-C12832A1Z-FSW-FBW-3V3	COG LCD display, 128x32 pixels
25	PCB1	1	A08-0913			XMEGA-A3B Xplained PCB, 4 layer, size 54mm x 85mm
26	Q300	1	2N7002	Fairchild	2N7002	N-Channel MOSFET. 60V, 0.115A continuous, 0.8A Peak. RDS(ON) = 7.5Ohm@VGS=5.0V, VGS(th)<3V
27	Q400	1	TEMT6000	vishay	TEMT6000	light sensor
28	Q500	1	2N7002	Philips	2N7002	N-channel MOSFET smal-signal, low-cost, SMD SOT23
29	R300, R301, R304, R305	4	220R			Thick film resistor, SMD 0402, 1/16W, 1%
30	R302, R501	2	1M	KOA	RK73H1ETTP1004F	Thick film resistor, SMD 0402, 1/16W, 1%
31	R303, R307, R308, R502, R503, R600, R601, R602	8	100k			Thick film resistor, SMD 0402, 1/16W, 1%
32	R400	1	470k			Thick film resistor, SMD 0402, 1/16W, 1%
33	R401	1	4.7k			Thick film resistor, SMD 0402, 1/16W, 1%
34	R402	1	NCP18WF104J03RB	Murata	NCP18WF104J03RB	NTC Thermistor 100kOhm @ 25deg,1/10W, 5%, SMD 0603
35	R403, R404	2	1k			Thick film resistor, SMD 0402, 1/16W, 1%
36	R500	1	10R			Thick film resistor, SMD 0402, 1/16W, 1%
37	SW300, SW301, SW302	3	SKRAAKE010	ALPS	SKRAAKE010	6.2x6.2 mm SMD tact switch, same as A08-0091 but less force is needed
38	U100	1	NCP1117LPST33T3G	ON Semiconductor	NCP1117LPST33T3G	The low power version of the popular NCP1117
39	U200	1	ATxmega256A3BU-AU	ATMEL	ATxmega256A3BU-AU	AVR 8-bit RISC MCU
40	U600	1	AT45DB642D-CNU	ATMEL	AT45DB642D-CNU	64-Mbit 2.7-volt serial data
41	XC200	1	32.768kHz +/-20PPM 7pF SMD	Micro Crystal	MS1V-T1K 32.768kHz 7pF +/-20PPM TA	32k768 crystal, +-20ppm, CL=7pF, max ESR 60kOhm, SMD
		75				

Approved

Notes