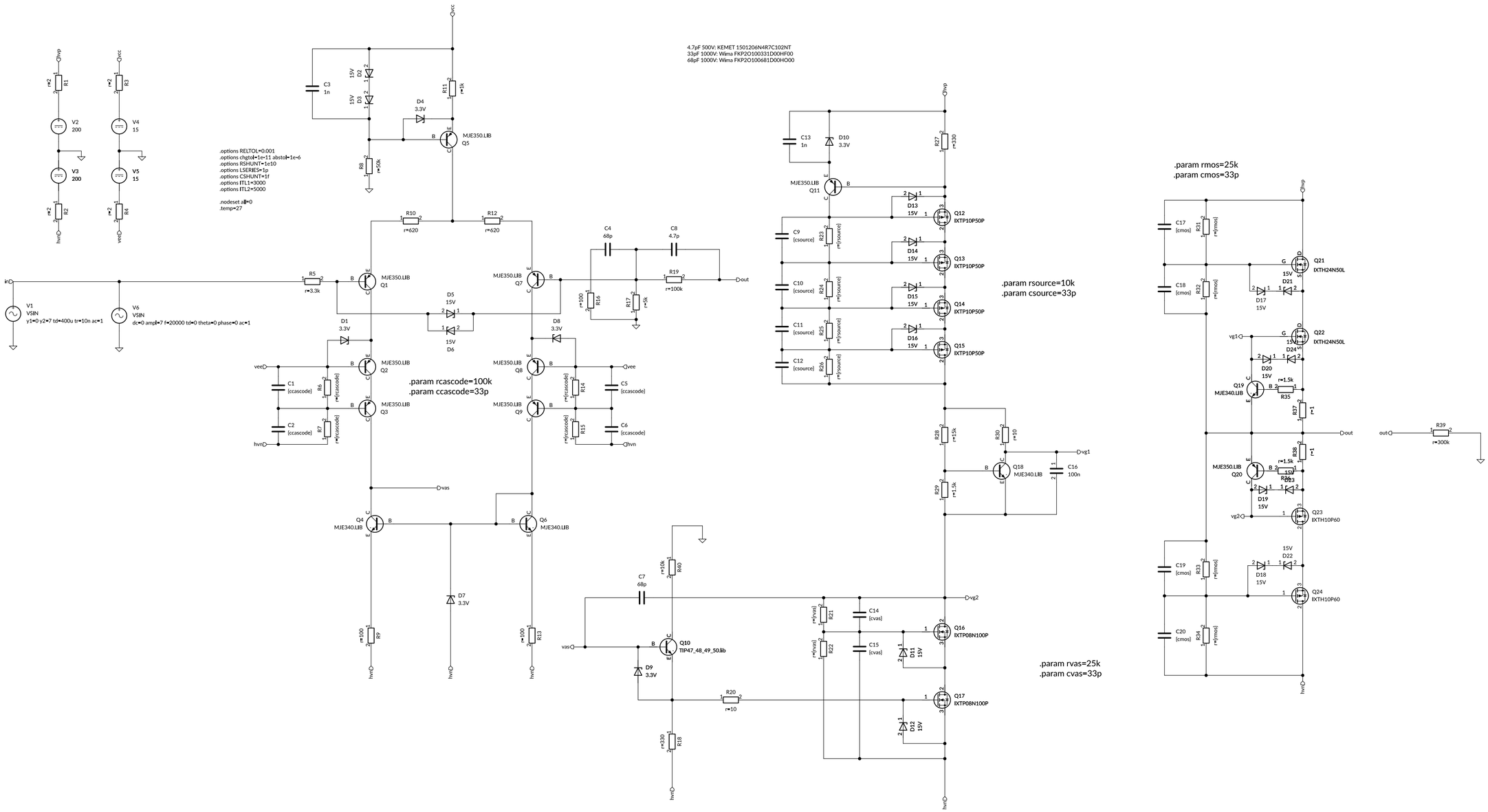
4.7pF 500V: KEMET 1501206N4R7C102NT
33pF 1000V: Wima FKP2O100331D00HF00
68pF 1000V: Wima FKP2O100681D00HO00
.options RELTOL=0.001
.options chgtol=1e-11 abstol=1e-6
.options RSHUNT=1e10
.options LSERIES=1p
.options CSHUNT=1f
.options ITL1=3000
.options ITL2=5000
.nodeset all=0
.temp=27
.param rcascode=100k
.param ccascode=33p
.param rsource=10k
.param csource=33p
.param rmos=25k
.param cmos=33p
.param rvas=25k
.param cvas=33p
V1
VSIN
y1=0 y2=7 td=400u tr=10n ac=1
V6
VSIN
dc=0 ampl=7 f=20000 td=0 theta=0 phase=0 ac=1
MJE350.LIB
MJE340.LIB
TIP47_48_49_50.lib
IXTP10P50P
IXTP08N100P
IXTH24N50L
IXTH10P60