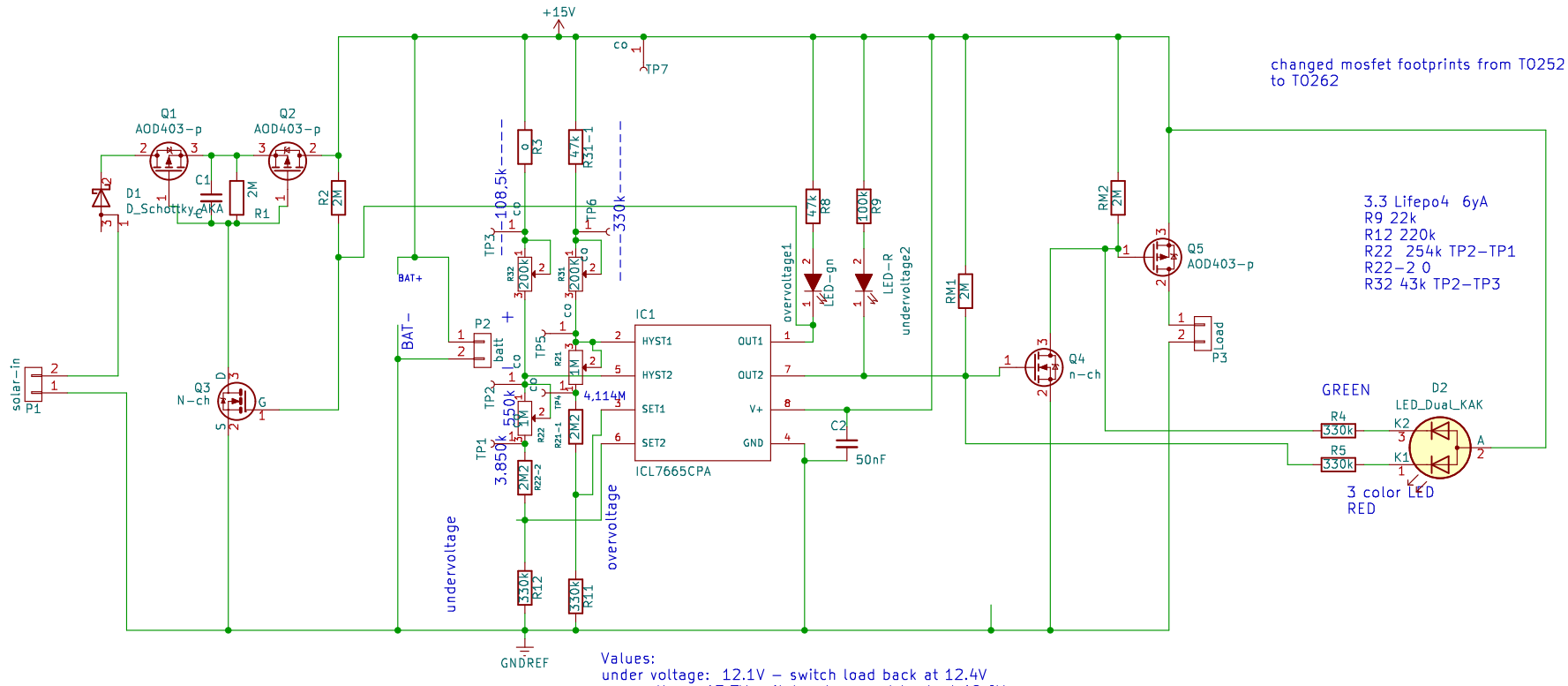


changed mosfet footprints from TO252
to TO262

3.3 Lifepo4 6yA
R9 22k
R12 220k
R22 254k TP2-TP1
R22-2 0
R32 43k TP2-TP3

Values:
under voltage: 12.1V - switch load back at 12.4V
over voltage: 13.7V switch solar panel back at 12.6V

Lifepo4 Board 2 overv. 14.1V turn back 13.3V
R31-1 220k
R31 100k var
R21 1M var
R21-1 3.9M

Lead-acid
undervoltage 12.1-12.5V
R12 330k
R22 2741k
R32 101,5k

overvoltage 12.9V - 13.7V

R11 330k
R21 2945k
R31 203k

D1 battery to solar panel
discharge protection
D2 reverse polarity protection
for solar Panel
Q6 Battery reverse polarity protection

| | | |
|---|---|---|
| Sheet: | | |
| File: icl.kicad_sch | | |
| **Title: solar control 7665** | | |
| Size: A4 | Date: 2019-07-21 | Rev: |
| KiCad E.D.A. eeschema 7.0.0-da2b9df05c~171~ubuntu20.04.1 | | Id: 1/1 |